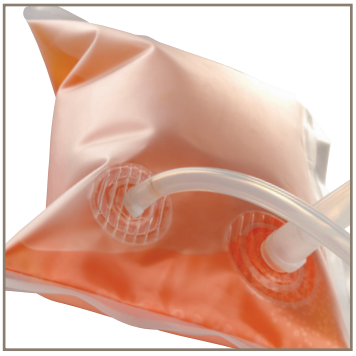

Bioprocessing & Pharmaceutical

Product Catalogue

Parker domnick hunter

ENGINEERING YOUR SUCCESS.

ENERGOEKONOM spol. s r.o., Wolkerova 433, CZ-250 82 Úvaly, Czech Republic, Tel.: +420 281 981 055, info@energoekonom.cz, www.energoekonom.cz

This document is available in ELECTRONIC FORMAT ONLY.

Parker domnick hunter have a continuous environment policy.

filtration sensors automated systems

Parker Hannifin Manufacturing Ltd

domnick hunter Process Filtration - Europe

Durham Road
Birtley, Co. Durham
DH3 2SF, England
phone +44 (0)191 4105121
fax +44 (0)191 4105312
email: dhprocess@parker.com
www.parker.com/dhpharma

Parker Hannifin Corporation

domnick hunter Process Filtration - North America

2340 Eastman Avenue,
Oxnard, California, USA 93030
toll free: 877 784 2234
phone: +1 805 604 3400
fax: +1 608 824 0509
email: dhpsales.na@parker.com
www.parker.com/dhpharma

Contents

Biopharmaceutical Filters

Depth/Prefilters
PROCLEAR GF — Glass Fibre
PROCLEAR GP — Glass Fibre / Polypropylene
PROCLEAR PP — Polypropylene
Filter Discs
Membrane/Final Filters
PROPOR BR — 0.2 micron Bioburden Reduction
PROPOR HC — 0.2 micron Sterilizing-Grade High Capacity
PROPOR MR — 0.1 micron Mycoplasma Removal
PROPOR SG — 0.2 micron Sterilizing-Grade

Hollow Fibre TFF Filters
PROPOR TFF - Autoclaveable — Modifield Polyethersulphone
PROPOR TFF - Reusable — Modifield Polyethersulphone
PROPOR TFF - Single-use — Modifield Polyethersulphone

Sensors

SciCon® — Conductivity Sensor
SciPres® — Pressure Sensor
SciTemp® — Temperature Sensor

Automated Systems

HarvestClear™ — Cell Culture Harvest Filtration System
ChemTec™ — Laboratory Metering System
FilterTec™ and FilterTec™ Plus — Laboratory NFF System
LabTec™ — Laboratory Dispensing System
MabTec® — High Density Cell Culture System
PureTec® — Laboratory TFF System
SciFlex® NFF — Bioprocessing System
SciFlex® Filter and Dispense System — Bioprocessing System
SciFlex® TFF — Bioprocessing System
SciPure® — GMP-Ready TFF & NFF Bioprocessing System
WeighStation™ Family — Gravimetric Fluid Handling Platform

Fluid Transfer & Storage

mitos-P — Platinum Cured Silicone Tubing
mitos-R — Reinforced Platinum Cured Silicone Tubing
mitos-W — Platinum Cured Silicone Hose, SS Wire Inforced Tubing
mitos-WCO — Platinum Cured Silicone Hose
Molded Silicone Manifolds
DuraPure™ Bioprocess Container Systems
DuraPure™ C93 Bioprocess Container Systems
klave-it™ Bioprocess Containers
FREE FLOW® Valves
FREE FLOW® Sampling Valves

General

Endcap styles
DEMICAP options
MURUS and syringe options
PROPOR TFF styles
Installation and operating guidelines
Conversion tables
Chemical compatibility
Glossary of terms used in filtration

Contents continued...

General Pharmaceutical Filters

Gas Prefilters

HIGH FLOW PREPOR GFA	Glass Fibre
PEPLYN AIR	Polypropylene

Sterilizing-Grade Gas Filters

HIGH FLOW BIO-X	PTFE Impregnated Borosilicate Microfibre
HIGH FLOW TETPOR II	PTFE
HIGH FLOW TETPOR H.T.	High Temperature PTFE
TETPOR AIR	PTFE

Liquid Prefilters

Bag Filters	Polypropylene
PEPLYN PLUS	Pleated Polypropylene
PREPOR GF	Glass Fibre
PROSTEEL A & N	Stainless Steel
SPUNFLOW QE	Polypropylene

Membrane Filters

PROPOR LR	0.1 micron PES
TETPOR LIQUID	PTFE
TETPOR PLUS	PTFE

Steam Filters

Pleated / Sintered

Housings

Single & Demi Cartridge Housings

HSA	Sanitary Air / Gas
HSA⊕ Z Style	Sanitary Air / Gas
HSV	Vent Applications
HSVLP	Sanitary Liquid L Configuration
HSL	Sanitary Liquid
HSI	In-line Sanitary
HIL	Industrial Liquid

Enhanced Plus Single Cartridge Housings

HCA	Alloy 22 Gas
HCL	Alloy 22 Liquid

Multi-Round Cartridge Housings

ZVA	Air / Gas
VIS	High Flow Steam
VSL	Sanitary Liquid
VIL	Industrial Multi Liquid

Accessories

Gauges
Valves
Spares
Certificates

TURBOSEP

ProActive Fermenter Off-Gas Control System

Integrity Test Equipment

Valairdata 3	Aerosol Challenge
Porecheck 4	Water Intrusion, Pressure Decay and Bubble Point

Parker domnick hunter has a continuous policy of product development and although the Company reserves the right to change specification, it attempts to keep customers informed of any alterations. This publication is for general information only and customers are requested to contact our Process Filtration Sales Department for detailed information and advice on a product's suitability for specific applications. All products are sold subject to the company's Standard conditions of sale.

PROCLEAR GF Filters

- liquid filters
- glass microfibre

PROCLEAR GF filters are designed for reliable and economical removal of particulate and microorganisms from pharmaceutical fluids.

The non-fibre releasing glass microfibre filter media gives excellent dirt holding capacity and high flow rates for long service life and efficient and cost-effective filter system design.

PROCLEAR GF filters have low extractable levels making them ideal for general clarification and prefiltration duties in pharmaceutical processing.

Note: PROCLEAR and DEMICAP are registered trademarks of Parker Hannifin Corporation.

Features and Benefits

- Excellent dirt holding capacity
- Non-fibre releasing glass microfibre media
- Long service life for maximum throughput
- MURUS and DEMICAPs can be gamma-irradiated and autoclaved

Performance Characteristics

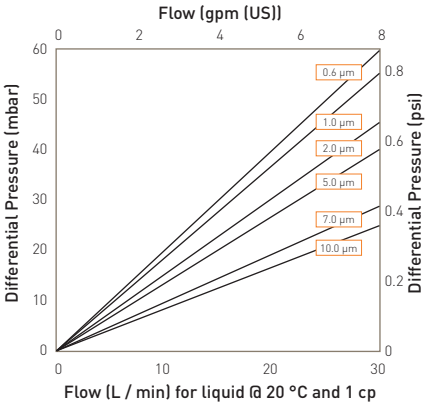

For K size for a given flow rate multiply 10¨ size differential pressure by 2

10¨ size (250 mm) Cartridge

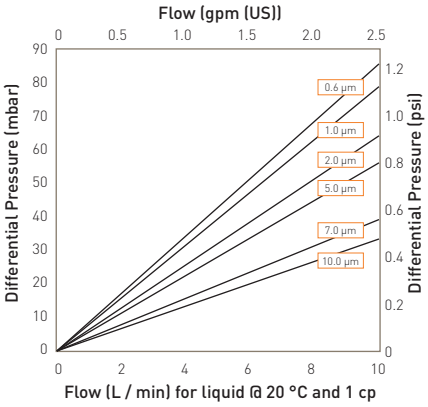

For A size for a given flow rate divide B size differential pressure by 2
For E size for a given flow rate multiply B size differential pressure by 2

B size (65 mm) Cartridge and Capsule

Specifications

Materials of Construction

- Filtration Media: Glass Microfibre
- Upstream Support: Polypropylene
- Downstream Support: Polypropylene

Filter Cartridges

- Inner Support Core: Polypropylene
- Outer Protection Cage: Polypropylene
- End Caps: Polypropylene
- End Caps Insert: 316L Stainless Steel

**Not available in B & L endcap variants*

MURUS Disposable Filter Capsules

- Core: Polypropylene
- Sleeve: Polypropylene
- End Caps Insert: 316L Stainless Steel
- Standard o-rings/gaskets: Silicone
- Capsule Body: Polypropylene
- Capsules Vent Seals: Silicone

DEMICAP Filter Capsules

- Core: Polypropylene
- Sleeve: Polypropylene
- Capsule Body: Polypropylene
- Capsules Vent Seals: Silicone
- Filling Bell: Polycarbonate

Syringe Filters

- Body: Polypropylene

Recommended Operating Conditions

Filter Cartridges

Up to 70 °C (158 °F) continuous operating temperature and higher short-term temperatures during CIP to the following limits:

Temperature °C	Temperature °F	Max. Forward dP (bar)	Max. Forward dP (psi)
20	68	5.0	72.5
40	104	4.0	58.0
60	140	3.0	43.5
80	176	2.0	29.0
90	194	1.5	21.7

MURUS Disposable Filter Capsules

Up to 25 °C (77 °F) @ 5.5 barg (79.7 psig)
Up to 60 °C (140 °F) @ 2.8 barg (40.6 psig)

Parker Hannifin certify that this product complies with the current European Council Pressure Equipment Directive (PED) - Sound Engineering Practice (SEP). This product is intended for use with Group 1 & 2 Dangerous and Harmless Liquids and Group 2 Harmless Gases at the operating conditions stated in this document. The Pressure Equipment Directive mandates that category SEP product cannot bear the CE mark.

DEMICAP Filter Capsules

Up to 40 °C (104 °F) at line pressures up to 5.0 barg (72 psig).

Effective Filtration Area (EFA)

10" (250 mm):	0.56 m^2	(6.0 ft^2)
K Size:	0.27 m^2	(2.9 ft^2)
A Size:	0.20 m^2	(2.2 ft^2)
B Size:	0.10 m^2	(1.1 ft^2)
E Size:	0.05 m^2	(0.6 ft^2)
Syringe ø50 mm:	14.50 cm^2	(2.25 in^2)

Sterilization

	Autoclave Cycles	Autoclave Temp	Steam-in-Place Cycles (30 min.)	Steam-in-Place Temp
Cartridges	10	130 °C (266 °F)	10	121 °C (249.8 °F)
MURUS	5	130 °C (266 °F)	-	-
DEMICAP	10	130 °C (266 °F)	-	-
Syringe	1	130 °C (266 °F)	-	-

PROCLEAR GF filter cartridges can be sanitized with hot water at up to 90 °C (194 °F) and are compatible with a wide range of chemicals.

For detailed operational procedures and advice on cleaning and sterilization, please contact the Technical Support Group through your usual Parker domnick hunter contact.

Biological Safety

Materials conform to the relevant requirements of 21CFR Part 177 and current USP Plastics Class VI - 121 °C and ISO10993 equivalents.

Quality Standards

Pharmaceutical grade products are manufactured in accordance with cGMP, 100% flushed with pharmaceutical grade purified water.

Gamma-Irradiation

PROCLEAR GF MURUS & DEMICAP disposable filters can be gamma-irradiated up to a maximum dosage of 40 kGy.

Performance Characteristics

TOC / Conductivity
The filtrate quality from a 10¨ (250 mm) PROCLEAR GF conforms to the requirements of current USP <643> (TOC) and USP <645> (conductivity) within the first 200 ml flush of purified water.

Endotoxins
Aqueous extracts from the 10¨ (250 mm) PROCLEAR GF contain < 0.25 EU / ml when tested in accordance with the Limulus Amoebocyte Lysate test.

Non-Volatile Extractables (NVE)
Total NVEs extracted in the first 5 litre flush of purified water for a 10¨ (250 mm) cartridge are <10 mg.

Total NVEs extracted in the first 5 litre flush of purified water for an A size 7.9¨ (200 mm) DEMICAP capsule are <5 mg.

Pharmaceutical Validation
A full validation guide is available upon request from Laboratory Services Group (LSG).

Oxidizable Substances
PROCLEAR GF filter cartridges meet current USP and EP quality standards for sterile purified water for oxidizable substances following a <1 litre water flush.

Ordering Information

Cartridges

PCGF [ ] - [ ] [ ] - [ ] [ ]

Code	Length (Nominal)	
B*	2.5"	(65 mm)
A*	5"	(125 mm)
K	5"	(125 mm)
1	10"	(250 mm)
2	20"	(500 mm)
3	30"	(750 mm)
4	40"	(1000 mm)

** Supplied in packs of 3.*

Code	Micron	
96	0.6	µm
01	1.0	µm
02	2.0	µm
05	5.0	µm
07	7.0	µm
10	10.0	µm

Ratings based on efficiencies of > or = 99.98% using internal test procedure SOP018 based on ASTM F795-88 1993

Code	Endcap (10")
B*	dh DOE
C	BF / 226 Bayonet
D	Fin / 222
E	Flat Top / 222
G	Recess / 222
H	UF Retrofit
J	SOE (no o-ring)
L*	dh DOE
N	Internal 213
R	BF / 222 Bayonet

Code	Endcap (Demi)
T	TRUESEAL
Y	Demi Stub
Z	Demi A & B Std

** EPDM gaskets supplied as standard*

Code	Variant
P	Pharmaceutical

Code	O-rings
E	EPDM
P	PTFE Encapsulated Silicone
S	Silicone
V	Viton

MURUS Capsules

PLGF [ ] - [ ] [ ] [ ] - [ ] [ ] [ ] - [ ]

Code	Length (Nominal)	
K	5"	(125 mm)
1	10"	(250 mm)
2	20"	(500 mm)
3	30"	(750 mm)

Code	Micron	
96	0.6	µm
01	1.0	µm
02	2.0	µm
05	5.0	µm
07	7.0	µm
10	10.0	µm

Ratings based on efficiencies of > or = 99.98% using internal test procedure SOP018 based on ASTM F795-88 1993

Code	Inlet Connection
A	3/4" Tri-Clamp
B	1 1/2" Tri-Clamp
D	1" Hosebarb
T	1" Tri-Clamp

Code	Outlet Connection
A	3/4" Tri-Clamp
B	1 1/2" Tri-Clamp
D	1" Hosebarb
T	1" Tri-Clamp

Code	Variant
P	Pharmaceutical

Code	Grade
N	Non-sterile
S	Pre-sterilised γ (>25 kGy)

Code	Design
L	In-Line
T*	T-Port

**Only available with a 1" Tri-Clamp*

Code	O-rings
E	EPDM
P	PTFE Encapsulated Silicone
S*	Silicone
V	Viton

** Silicone o-ring supplied as standard without having to specify the 'S' code.*

DEMICAP Capsules

PEGF [ ] - [ ] [ ] [ ] - [ ] [ ] [ ] - [ ]

Code	Length (Nominal)	
E	4.4"	(113 mm)
B	5.5"	(140 mm)
A	7.9"	(200 mm)

Code	Micron	
96	0.6	µm
01	1.0	µm
02	2.0	µm
05	5.0	µm
07	7.0	µm
10	10.0	µm

Ratings based on efficiencies of > or = 99.98% using internal test procedure SOP018 based on ASTM F795-88 1993

Code	Inlet Connection
T	1" Tri-Clamp
N	1/2" NPT Male
H	1/2" Hosebarb
G	Stepped Hosebarb
M	1/4" NPT Male
Q	Walther QC
R	Grommel / QC
V	3/8" NPT Female

Code	Outlet Connection
T	1" Tri-Clamp
N	1/2" NPT Male
H	1/2" Hosebarb
G	Stepped Hosebarb
M	1/4" NPT Male
Q	Walther QC
R	Grommel / QC
V	3/8" NPT Female

Code	Variant
P	Pharmaceutical

Code	Grade
N	Non-sterile
S	Pre-sterilized γ (>25 kGy)

Code	Pack N°
3	Pack of 3

Code	Accessory
FB	Filling Bell

G & H connections only

Syringe Filters

PSGF [ ] - [ ] [ ] [ ] - [ ] [ ] [ ] [ ]

Code	Diameter
050	50 mm

Code	Micron	
96	0.6	µm
01	1.0	µm
02	2.0	µm
05	5.0	µm
07	7.0	µm
10	10.0	µm

Ratings based on efficiencies of > or = 99.98% using internal test procedure SOP018 based on ASTM F795-88 1993

Code	Inlet Connection
F	Female Luer Lock
G	Stepped Hosebarb

Code	Outlet Connection
F	Female Luer Lock
G	Stepped Hosebarb

Code	Variant
P	Pharmaceutical

Code	Grade
N	Non-sterile

Code	Options
S	Standard

Code	Pack N°
025	25 per box

Parker domnick hunter has a continuous policy of product development and although the Company reserves the right to change specifications, it attempts to keep customers informed of any alterations. This publication is for general information only and customers are requested to contact our Process Filtration Sales Department for detailed information and advice on a products suitability for specific applications. All products are sold subject to the company's Standard conditions of sale.

Europe: +44 (0)191 4105121 dhprocess@parker.com - North America: toll free 877 784 2234 +1 805 604 3400 dhpsales.na@parker.com www.parker.com/dhpharma

ENERGOEKONOM spol. s r.o., Wolkerova 433, CZ-250 82 Úvaly, Czech Republic, Tel.: +420 281 981 055, info@energoekonom.cz, www.energoekonom.cz

PROCLEAR GP Filters

- liquid filters
- glass microfibre / polypropylene

PROCLEAR GP filters combine glass microfibre and polypropylene media to provide maximum protection to downstream filter membranes and equipment.

Dirt holding capacity is maximized through use of a graded density media making PROCLEAR GP cartridge filters an economical and reliable choice for prefiltration.

PROCLEAR GP filters have low extractable levels and are suitable for bioburden reduction and fine prefiltration of pharmaceutical fluids and are ideal for high contamination applications.

Note: PROCLEAR and DEMICAP are registered trademarks of Parker Hannifin Coporation.

Features and Benefits

- Dual layer media or increased capacity and assurance
- Maximizes retention for protection of downstream membranes
- Ideal for difficult to filter solutions
- MURUS and DEMICAPs can be gamma-irradiated and autoclaved

Performance Characteristics

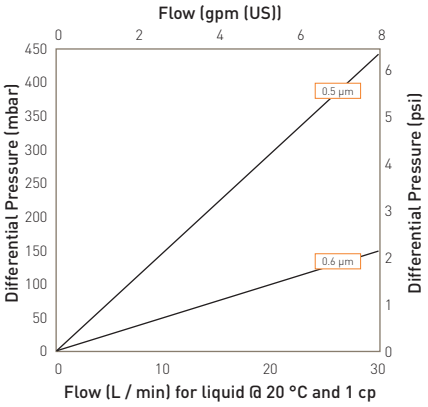

For K size for a given flow rate multiply 10¨ size differential pressure by 2

10¨ size (250 mm) Cartridge

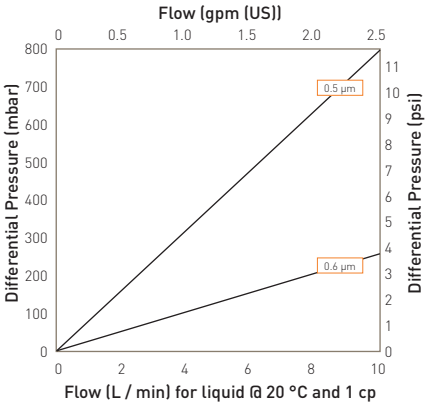

For A size for a given flow rate divide B size differential pressure by 2
For E size for a given flow rate multiply B size differential pressure by 2

B size (65 mm) Cartridge and Capsule

Specifications

Materials of Construction

- Filtration Media: Glass Microfibre / Polypropylene
- Upstream Support: Polypropylene
- Downstream Support: Polypropylene

Filter Cartridges

- Inner Support Core: Polypropylene
- Outer Protection Cage: Polypropylene
- End Caps: Polypropylene
- End Caps Insert: 316L Stainless Steel

**Not available in B & L endcap variants*

MURUS Disposable Filter Capsules

- Core: Polypropylene
- Sleeve: Polypropylene
- End Caps Insert: 316L Stainless Steel
- Standard o-rings/gaskets: Silicone
- Capsule Body: Polypropylene
- Capsules Vent Seals: Silicone

DEMICAP Filter Capsules

- Core: Polypropylene
- Sleeve: Polypropylene
- Capsule Body: Polypropylene
- Capsules Vent Seals: Silicone

Syringe Filters

- Body: Polypropylene

Recommended Operating Conditions

Filter Cartridges

Up to 70 °C (158 °F) continuous operating temperature and higher short-term temperatures during CIP to the following limits:

Temperature °C	Temperature °F	Max. Forward dP (bar)	Max. Forward dP (psi)
20	68	5.0	72.5
40	104	4.0	58.0
60	140	3.0	43.5
80	176	2.0	29.0
90	194	1.5	21.7

MURUS Disposable Filter Capsules

Up to 25 °C (77 °F) @ 5.5 barg (79.7 psig)
Up to 60 °C (140 °F) @ 2.8 barg (40.6 psig)

Parker Hannifin certify that this product complies with the current European Council Pressure Equipment Directive (PED) - Sound Engineering Practice (SEP). This product is intended for use with Group 1 & 2 Dangerous and Harmless Liquids and Group 2 Harmless Gases at the operating conditions stated in this document. The Pressure Equipment Directive mandates that category SEP product cannot bear the CE mark.

DEMICAP Filter Capsules

Up to 40 °C (104 °F) at line pressures up to 5.0 barg (72 psig).

Effective Filtration Area (EFA)

10" (250 mm):	0.34 m^2	(3.7 ft^2)
K Size:	0.16 m^2	(1.7 ft^2)
A Size:	0.12 m^2	(1.3 ft^2)
B Size:	0.06 m^2	(0.6 ft^2)
E Size:	0.03 m^2	(0.3 ft^2)
Syringe ø50 mm:	14.50 cm^2	(2.25 in^2)

Sterilization

	Autoclave Cycles	Autoclave Temp	Steam-in-Place Cycles (30 min.)	Steam-in-Place Temp
Cartridges	10	130 °C (266 °F)	10	121 °C (249.8 °F)
MURUS	5	130 °C (266 °F)	-	-
DEMICAP	10	130 °C (266 °F)	-	-
Syringe	1	130 °C (266 °F)	-	-

PROCLEAR GP filter cartridges can be sanitized with hot water at up to 90 °C (194 °F) and are compatible with a wide range of chemicals.

For detailed operational procedures and advice on cleaning and sterilization, please contact the Technical Support Group through your usual Parker domnick hunter contact.

Biological Safety

Materials conform to the relevant requirements of 21CFR Part 177 and current USP Plastics Class VI - 121 °C and ISO10993 equivalents.

Quality Standards

Pharmaceutical grade products are manufactured in accordance with cGMP, 100% flushed with pharmaceutical grade purified water.

Gamma-Irradiation

PROCLEAR GP MURUS & DEMICAP disposable filters can be gamma-irradiated up to a maximum dosage of 40 kGy.

Performance Characteristics

TOC / Conductivity
The filtrate quality from a 10" (250 mm) PROCLEAR GP conforms to the requirements of current USP <643> (TOC) and USP <645> (conductivity) within the first 200 ml flush of purified water.

Endotoxins
Aqueous extracts from the 10" (250 mm) PROCLEAR GP contain < 0.25 EU / ml when tested in accordance with the Limulus Amoebocyte Lysate test.

Non-Volatile Extractables (NVE)
Total NVEs extracted in the first 5 litre flush of purified water for a 10" (250 mm) cartridge are <10 mg.

Total NVEs extracted in the first 5 litre flush of purified water for an A size 7.9" (200 mm) DEMICAP capsule are <5 mg.

Pharmaceutical Validation
A full validation guide is available upon request from Laboratory Services Group (LSG).

Oxidizable Substances
PROCLEAR GP filter cartridges meet current USP and EP quality standards for sterile purified water for oxidizable substances following a <1 litre water flush.

Ordering Information

Cartridges

PCGP [ ] - [ ] [ ] - [ ] [ ]

Code	Length (Nominal)
B*	2.5" (65 mm)
A*	5" (125 mm)
K	5" (125 mm)
1	10" (250 mm)
2	20" (500 mm)
3	30" (750 mm)
4	40" (1000 mm)

** Supplied in packs of 3.*

Code	Micron
95	0.5 µm
96	0.6 µm

Ratings based on efficiencies of > or = 99.98% using internal test procedure SOP018 based on ASTM F795-88 1993

Code	Endcap (10")
B*	dh DOE
C	BF / 226 Bayonet
D	Fin / 222
E	Flat Top / 222
G	Recess / 222
H	UF Retrofit
J	SOE (no o-ring)
L*	dh DOE
N	Internal 213
R	BF / 222 Bayonet

Code	Endcap (Demi)
T	TRUESEAL
Y	Demi Stub
Z	Demi A & B Std

** EPDM gaskets supplied as standard*

Code	Variant
P	Pharmaceutical

Code	O-rings
E	EPDM
P	PTFE Encapsulated Silicone
S	Silicone
V	Viton

MURUS Capsules

PLGP [ ] - [ ] [ ] [ ] - [ ] [ ] [ ] - [ ]

Code	Length (Nominal)
K	5" (125 mm)
1	10" (250 mm)
2	20" (500 mm)
3	30" (750 mm)

Code	Micron
95	0.5 µm
96	0.6 µm

Ratings based on efficiencies of > or = 99.98% using internal test procedure SOP018 based on ASTM F795-88 1993

Code	Inlet Connection
A	3/4" Tri-Clamp
B	1 1/2" Tri-Clamp
D	1" Hosebarb
T	1" Tri-Clamp

Code	Outlet Connection
A	3/4" Tri-Clamp
B	1 1/2" Tri-Clamp
D	1" Hosebarb
T	1" Tri-Clamp

Code	Variant
P	Pharmaceutical

Code	Grade
N	Non-sterile
S	Pre-sterilized γ (>25 kGy)

Code	Design
L	In-Line
T*	T-Port

**Only available with a 1" Tri-Clamp*

Code	O-rings
E	EPDM
P	PTFE Encapsulated Silicone
S*	Silicone
V	Viton

** Silicone o-ring supplied as standard without having to specify the 'S' code.*

DEMICAP Capsules

PEGP [ ] - [ ] [ ] [ ] - [ ] [ ] [ ] - [ ]

Code	Length (Nominal)
E	4.4" (113 mm)
B	5.5" (140 mm)
A	7.9" (200 mm)

Code	Micron
95	0.5 µm
96	0.6 µm

Ratings based on efficiencies of > or = 99.98% using internal test procedure SOP018 based on ASTM F795-88 1993

Code	Inlet Connection
T	1" Tri-Clamp
N	1/2" NPT Male
H	1/2" Hosebarb
G	Stepped Hosebarb
M	1/4" NPT Male
V	3/8" NPT Female

Code	Outlet Connection
T	1" Tri-Clamp
N	1/2" NPT Male
H	1/2" Hosebarb
G	Stepped Hosebarb
M	1/4" NPT Male
V	3/8" NPT Female

Code	Variant
P	Pharmaceutical

Code	Grade
N	Non-sterile
S	Pre-sterilized γ (>25 kGy)

Code	Pack N°
3	Pack of 3

Code	Accessory
FB	Filling Bell

G & H connections only

Syringe Filters

PSGP [ ] - [ ] [ ] [ ] - [ ] [ ] [ ] [ ]

Code	Diameter
050	50 mm

Code	Micron
95	0.5 µm
96	0.6 µm

Code	Inlet Connection
F	Female Luer Lock
G	Stepped Hosebarb

Code	Outlet Connection
F	Female Luer Lock
G	Stepped Hosebarb

Code	Variant
P	Pharmaceutical

Code	Grade
N	Non-sterile

Code	Options
S	Standard

Code	Pack N°
025	25 per box

Europe: +44 (0)191 4105121 dhprocess@parker.com - North America: toll free 877 784 2234 +1 805 604 3400 dhpsales.na@parker.com www.parker.com/dhpharma

Parker domnick hunter has a continuous policy of product development and although the Company reserves the right to change specifications, it attempts to keep customers informed of any alterations. This publication is for general information only and customers are requested to contact our Process Filtration Sales Department for detailed information and advice on a products suitability for specific applications. All products are sold subject to the company's Standard conditions of sale.

ENERGOEKONOM spol. s r.o., Wolkerova 433, CZ-250 82 Úvaly, Czech Republic, Tel.: +420 281 981 055, info@energoekonom.cz, www.energoekonom.cz

PROCLEAR PP Filters

- liquid filters
- polypropylene

PROCLEAR PP filters are designed for a wide range of prefiltration duties within the production of pharmaceuticals and are particularly suited to applications where chemical compatibility is an issue.

The optimum pleat configuration and graded density polypropylene media used in PROCLEAR PP filters ensure the filters have the highest possible throughput to blockage resulting in long service life.

The PROCLEAR PP range of filters are fully supported by a comprehensive validation guide to simplify its specification into new and existing processes.

Note: PROCLEAR and DEMICAP are registered trademarks of Parker Hannifin Corporation.

Features and Benefits

- Graded density polypropylene media for high capacity
- Extremely robust to withstand aggressive conditions
- All polypropylene construction
- MURUS and DEMICAPs can be gamma-irradiated and autoclaved

Performance Characteristics

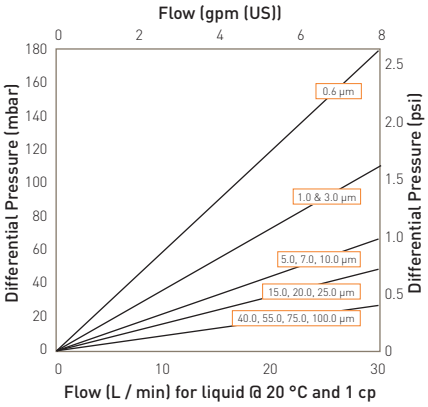

For K size for a given flow rate multiply 10¨ size differential pressure by 2

10¨ size (250 mm) Cartridge

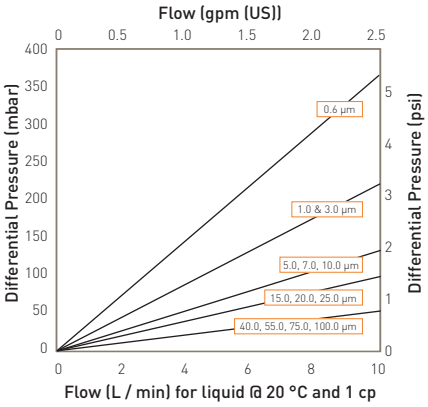

For A size for a given flow rate divide B size differential pressure by 2
For E size for a given flow rate multiply B size differential pressure by 2

B size (65 mm) Cartridge and Capsule

Specifications

Materials of Construction

- Filtration Media: Polypropylene
- Upstream Support: Polypropylene
- Downstream Support: Polypropylene

Filter Cartridges

- Inner Support Core: Polypropylene
- Outer Protection Cage: Polypropylene
- End Caps: Polypropylene
- End Caps Insert: 316L Stainless Steel

**Not available in B & L endcap variants*

MURUS Disposable Filter Capsules

- Core: Polypropylene
- Sleeve: Polypropylene
- End Caps Insert: 316L Stainless Steel
- Standard o-rings/gaskets: Silicone
- Capsule Body: Polypropylene
- Capsules Vent Seals: Silicone

DEMICAP Filter Capsules

- Core: Polypropylene
- Sleeve: Polypropylene
- Capsule Body: Polypropylene
- Capsules Vent Seals: Silicone
- Filling Bell: Polycarbonate

Syringe Filters

- Body: Polypropylene

Recommended Operating Conditions

Filter Cartridges

Up to 70 °C (158 °F) continuous operating temperature and higher short-term temperatures during CIP to the following limits:

Temperature °C	Temperature °F	Max. Forward dP (bar)	Max. Forward dP (psi)
20	68	5.0	72.5
40	104	4.0	58.0
60	140	3.0	43.5
80	176	2.0	29.0
90	194	1.5	21.7

MURUS Disposable Filter Capsules

Up to 25 °C (77 °F) @ 5.5 barg (79.7 psig)
Up to 60 °C (140 °F) @ 2.8 barg (40.6 psig)

Parker Hannifin certify that this product complies with the current European Council Pressure Equipment Directive (PED) - Sound Engineering Practice (SEP). This product is intended for use with Group 1 & 2 Dangerous and Harmless Liquids and Group 2 Harmless Gases at the operating conditions stated in this document. The Pressure Equipment Directive mandates that category SEP product cannot bear the CE mark.

DEMICAP Filter Capsules

Up to 40 °C (104 °F) at line pressures up to 5.0 barg (72 psig).

Effective Filtration Area (EFA)

10" (250 mm) up to 0.79m² (8.5 ft²)

Sterilization

PROCLEAR PP filter cartridges can be sanitized with hot water at up to 90 °C (194 °F) and are compatible with a wide range of chemicals.

	Autoclave Cycles	Autoclave Temp	Steam-in-Place Cycles (30 min.)	Steam-in-Place Temp
Cartridges	10	130 °C (266 °F)	30	135 °C (275 °F)
MURUS	5	130 °C (266 °F)	-	-
DEMICAP	10	130 °C (266 °F)	-	-
Syringe	1	130 °C (266 °F)	-	-

For detailed operational procedures and advice on cleaning and sterilization, please contact the Technical Support Group through your usual Parker domnick hunter contact.

Biological Safety

Materials conform to the relevant requirements of 21CFR Part 177 and current USP Plastics Class VI - 121 °C and ISO10993 equivalents.

Quality Standards

Pharmaceutical grade products are manufactured in accordance with cGMP, 100% flushed with pharmaceutical grade purified water.

Gamma-Irradiation

PROCLEAR PP MURUS & DEMICAP disposable filters can be gamma-irradiated up to a maximum dosage of 40 kGy.

Performance Characteristics

TOC / Conductivity
The filtrate quality from a 10¨ (250 mm) PROCLEAR PP conforms to the requirements of current USP <643> (TOC) and USP <645> (conductivity) within the first 200 ml flush of purified water.

Endotoxins
Aqueous extracts from the 10¨ (250 mm) PROCLEAR PP contain < 0.25 EU / ml when tested in accordance with the Limulus Amoebocyte Lysate test.

Non-Volatile Extractables (NVE)
Total NVEs extracted in the first 5 litre flush of purified water for a 10¨ (250 mm) cartridge are <10 mg.

Total NVEs extracted in the first 5 litre flush of purified water for an A size 7.9¨ (200 mm) DEMICAP capsule are <5 mg.

Pharmaceutical Validation
A full validation guide is available upon request from Laboratory Services Group (LSG).

Oxidizable Substances
PROCLEAR PP filter cartridges meet current USP and EP quality standards for sterile purified water for oxidizable substances following a <1 litre water flush.

Ordering Information

Cartridges

PCPP [ ] - [ ] [ ] - [ ] [ ]

Code	Length (Nominal)	
B*	2.5"	(65 mm)
A*	5"	(125 mm)
K	5"	(125 mm)
1	10"	(250 mm)
2	20"	(500 mm)
3	30"	(750 mm)
4	40"	(1000 mm)

** Supplied in packs of 3.*

Ratings based on efficiencies of > or = 99.98% using internal test procedure SOP018 based on ASTM F795-88 1993

Code	Micron
96	0.6 µm
01	1.0 µm
03	3.0 µm
05	5.0 µm
07	7.0 µm
10	10.0 µm
15	15.0 µm
20	20.0 µm
25	25.0 µm
40	40.0 µm
55	55.0 µm
75	75.0 µm
100*	100.0 µm

**Not available with A and B Size formats*

Code	Endcap (10")
B*	dh DOE
C	BF / 226 Bayonet
D	Fin / 222
E	Flat Top / 222
G	Recess / 222
H	UF Retrofit
J	SOE (no o-ring)
L*	dh DOE
N	Internal 213
R	BF / 222 Bayonet

Code	Endcap (Demi)
T	TRUESEAL
Y	Demi Stub
Z	Demi A & B Std

** EPDM gaskets supplied as standard*

Code	Variant
P	Pharmaceutical

Code	O-rings
E	EPDM
P	PTFE Encapsulated Silicone
S	Silicone
V	Viton

MURUS Capsules

PLPP [ ] - [ ] [ ] [ ] - [ ] [ ] [ ] - [ ]

Code	Length (Nominal)	
K	5"	(125 mm)
1	10"	(250 mm)
2	20"	(500 mm)
3	30"	(750 mm)

Ratings based on efficiencies of > or = 99.98% using internal test procedure SOP018 based on ASTM F795-88 1993

Code	Micron
96	0.6 µm
01	1.0 µm
03	3.0 µm
05	5.0 µm
07	7.0 µm
10	10.0 µm
15	15.0 µm
20	20.0 µm
25	25.0 µm
40	40.0 µm
55	55.0 µm
75	75.0 µm
100	100.0 µm

Code	Inlet Connection
A	3/4" Tri-Clamp
B	1 1/2" Tri-Clamp
D	1" Hosebarb
T	1" Tri-Clamp

Code	Outlet Connection
A	3/4" Tri-Clamp
B	1 1/2" Tri-Clamp
D	1" Hosebarb
T	1" Tri-Clamp

Code	Variant
P	Pharmaceutical

Code	Grade
N	Non-sterile
S	Pre-sterilized γ (>25 kGy)

Code	Design
L	In-Line
T*	T-Port

**Only available with a 1" Tri-Clamp*

Code	O-rings
E	EPDM
P	PTFE Encapsulated Silicone
S*	Silicone
V	Viton

** Silicone o-ring supplied as standard without having to specify the 'S' code.*

DEMICAP Capsules

PEPP [ ] - [ ] [ ] [ ] - [ ] [ ] [ ] - [ ]

Code	Length (Nominal)	
E	4.4"	(113 mm)
B	5.5"	(140 mm)
A	7.9"	(200 mm)

Ratings based on efficiencies of > or = 99.98% using internal test procedure SOP018 based on ASTM F795-88 1993

Code	Micron
96	0.6 µm
01	1.0 µm
03	3.0 µm
05	5.0 µm
07	7.0 µm
10	10.0 µm
15	15.0 µm
20	20.0 µm
25	25.0 µm
40	40.0 µm
55	55.0 µm
75	75.0 µm

Code	Inlet Connection
T	1" Tri-Clamp
N	1/2" NPT Male
H	1/2" Hosebarb
G	Stepped Hosebarb
M	1/4" NPT Male
Q	Walther QC
R	Grommel / QC
V	3/8" NPT Female

Code	Outlet Connection
T	1" Tri-Clamp
N	1/2" NPT Male
H	1/2" Hosebarb
G	Stepped Hosebarb
M	1/4" NPT Male
Q	Walther QC
R	Grommel / QC
V	3/8" NPT Female

Code	Variant
P	Pharmaceutical

Code	Grade
N	Non-sterile
S	Pre-sterilized γ (>25 kGy)

Code	Pack N°
3	Pack of 3

Code	Accessory
FB	Filling Bell

G & H connections only

Syringe Filters

PSPP [ ] - [ ] [ ] [ ] - [ ] [ ] [ ] [ ]

Code	Diameter
050	50 mm

Code	Micron
96	0.6 µm
01	1.0 µm
03	3.0 µm
05	5.0 µm
07	7.0 µm
10	10.0 µm
15	15.0 µm
20	20.0 µm
25	25.0 µm
40	40.0 µm
55	55.0 µm
75	75.0 µm

Code	Inlet Connection
F	Female Luer Lock
G	Stepped Hosebarb

Code	Outlet Connection
F	Female Luer Lock
G	Stepped Hosebarb

Code	Variant
P	Pharmaceutical

Code	Grade
N	Non-sterile

Code	Options
S	Standard

Code	Pack N°
025	25 per box

Parker domnick hunter has a continuous policy of product development and although the Company reserves the right to change specifications, it attempts to keep customers informed of any alterations. This publication is for general information only and customers are requested to contact our Process Filtration Sales Department for detailed information and advice on a products suitability for specific applications. All products are sold subject to the company's Standard conditions of sale.

Europe: +44 (0)191 4105121 dhprocess@parker.com - North America: toll free 877 784 2234 +1 805 604 3400 dhpsales.na@parker.com www.parker.com/dhpharma

ENERGOEKONOM spol. s r.o., Wolkerova 433, CZ-250 82 Úvaly, Czech Republic, Tel.: +420 281 981 055, info@energoekonom.cz, www.energoekonom.cz

PROPOR BR Filters

- liquid filters
- polyethersulphone

PROPOR BR filters have been specifically designed for the fast and cost-effective bioburden reduction of pharmaceutical solutions.

PROPOR BR filters feature an integral meltblown prefilter layer to maximize dirt holding capacity whilst the polyethersulphone membrane guarantees a bioburden log reduction of greater than 5 giving excellent microbial protection. This makes PROPOR BR filters ideal for bioburden reduction of LVPs prior to terminal sterilization.

PROPOR BR filters are also ideally suited to prefiltration and bioburden reduction prior to sterilizing grade membrane filters. The robust construction of PROPOR BR filters guarantees consistent performance on multiple batches.

Note: PROPOR and DEMICAP are registered trademarks of Parker Hannifin Corporation.

Features and Benefits

- *Brevundimonas diminuta* retention of LRV >5 for efficient bioburden reduction
- Additional prefilter layer gives excellent throughput to blockage
- Low binding for minimal product loss
- MURUS and DEMICAPs can be gamma-irradiated and autoclaved

Performance Characteristics

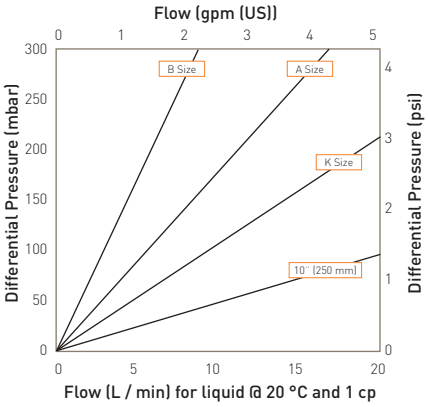

Cartridge flow rates

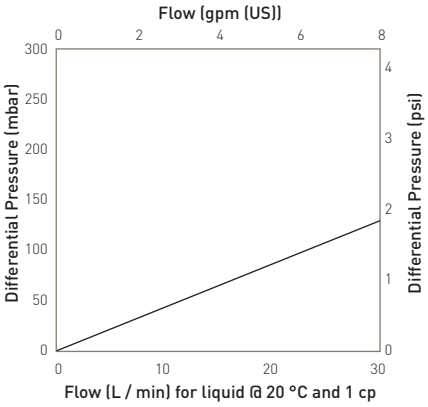

MURUS flow rates (10¨ Size (250 mm))

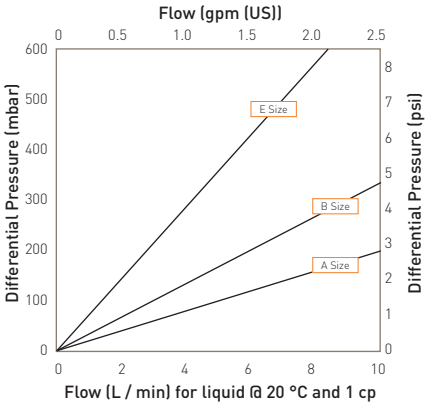

DEMICAP flow rates

Specifications

Materials of Construction

- Filtration Membrane: Polyethersulphone
- Prefilter Layer: Polyester
- Upstream Support: Polyester
- Downstream Support: Polyester

Filter Cartridges

- Inner Support Core: Polypropylene
- Outer Protection Cage: Polypropylene
- End Caps: Nylon
- End Caps Insert: 316L Stainless Steel

MURUS Disposable Filter Capsules

- Core: Polypropylene
- Sleeve: Polypropylene
- End Caps Insert: 316L Stainless Steel
- Standard o-rings/gaskets: Silicone
- Capsule Body: Polypropylene
- Capsules Vent Seals: Silicone

DEMICAP Filter Capsules

- Core: Polypropylene
- Sleeve: Polypropylene
- End Caps: Nylon
- Capsule Body: Nylon
- Capsules Vent Seals: Silicone
- Filling Bell: Polycarbonate

Syringe Filters

- Body: Polypropylene

Recommended Operating Conditions

Filter Cartridges

Up to 70 °C (158 °F) continuous operating temperature and higher short-term temperatures during CIP to the following limits:

Temperature °C	°F	Max. Forward dP (bar)	(psi)
20	68	5.0	72.5
40	104	4.0	58.0
60	140	3.0	43.5
80	176	2.0	29.0
90	194	1.7	24.6

MURUS Disposable Filter Capsules

Up to 25 °C (77 °F) @ 5.5 barg (79.7 psig)
Up to 60 °C (140 °F) @ 2.8 barg (40.6 psig)

Parker Hannifin certify that this product complies with the current European Council Pressure Equipment Directive (PED) - Sound Engineering Practice (SEP). This product is intended for use with Group 1 & 2 Dangerous and Harmless Liquids and Group 2 Harmless Gases at the operating conditions stated in this document. The Pressure Equipment Directive mandates that category SEP product cannot bear the CE mark.

DEMICAP Filter Capsules

Up to 40 °C (104 °F) at line pressures up to 5.0 barg (72 psig).

Effective Filtration Area (EFA)

10" (250 mm):	0.55	m^2	(5.92 ft^2)
K Size:	0.26	m^2	(2.79 ft^2)
A Size:	0.20	m^2	(2.15 ft^2)
B Size:	0.10	m^2	(1.07 ft^2)
E Size:	0.05	m^2	(0.53 ft^2)
Syringe ø50 mm:	14.50	cm^2	(2.25 in^2)

Sterilization

	Autoclave Cycles	Autoclave Temp	Steam-in-Place Cycles (30 min.)	Steam-in-Place Temp
Cartridges	10	130 °C (266 °F)	30	130 °C (266 °F)
MURUS	5	130 °C (266 °F)	-	-
DEMICAP	10	130 °C (266 °F)	-	-
Syringe	1	130 °C (266 °F)	-	-

PROPOR BR filter cartridges can be sanitized with hot water at up to 90 °C (194 °F) and are compatible with a wide range of chemicals.

For detailed operational procedures and advice on cleaning and sterilization, please contact the Technical Support Group through your usual Parker domnick hunter contact.

Biological Safety

Materials conform to the relevant requirements of 21CFR Part 177 and current USP Plastics Class VI - 121 °C and ISO10993 equivalents.

Quality Standards

Pharmaceutical grade products are manufactured in accordance with cGMP, 100% flushed with pharmaceutical grade purified water and integrity tested prior to despatch. A sample of each lot is tested to demonstrate conformity to validated claims.

Gamma-Irradiation

PROPOR BR MURUS & DEMICAP disposable filters can be gamma-irradiated up to a maximum dosage of 40 kGy.

Performance Characteristics

TOC / Conductivity
The filtrate quality from a 10" (250 mm) PROPOR BR conforms to the requirements of current USP <643> (TOC) and USP <645> (conductivity) within the first 200 ml flush of purified water.

Endotoxins
Aqueous extracts from the 10" (250 mm) PROPOR BR contain < 0.25 EU / ml when tested in accordance with the Limulus Amoebocyte Lysate test.

Non-Volatile Extractables (NVE)
Total NVEs extracted in the first 5 litre flush of purified water for a 10" (250 mm) cartridge are <10 mg.

Total NVEs extracted in the first 5 litre flush of purified water for an A size 7.9" (200 mm) DEMICAP capsule are <5 mg.

Pharmaceutical Validation
A full validation guide is available upon request from Laboratory Services Group (LSG).

Oxidizable Substances
PROPOR BR filter cartridges meet current USP and EP quality standards for sterile purified water for oxidizable substances following a <1 litre water flush.

Integrity Test Data
All filters are integrity testable to the following limits when wet with water and using air as the test gas.

Micron Rating		0.2
Filter Cartridges / MURUS / DEMICAP		
Min. Bubble Point	(barg)	2.5
	(psig)	36.0
Filter Cartridges / MURUS / DEMICAP / Syringe Filters		
Diffusional Flow	(barg)	1.7
Test Pressure	(psig)	24.7
Filter Cartridges / MURUS / DEMICAP / Syringe Filters		
Max. Diffusional Flow (10")		16.0
(ml / min)	(K)	7.4
	(A)	6.0
	(B)	2.9
	(E)	1.2

Retention Characteristics
PROPOR BR filter cartridges are validated to an LRV > 5 by bacterial challenge testing with *Brevundimonas diminuta* to current ASTM F838 methodology (10^7 organisms / cm^2 EFA minimum) with typical in-house challenge levels being 10^{11} organisms per 10" (250 mm) module.

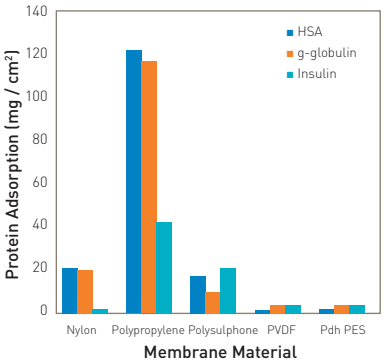

Protein binding on membrane materials

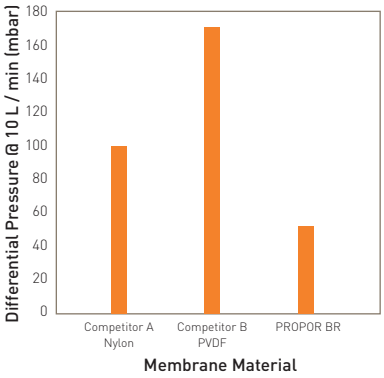

Flow rate comparison for bioburden reduction filters

Ordering Information

Cartridges

ZCBR [ ] - [ ] [ ] - [ ] [ ]

Code	Length (Nominal)
B*	2.5" (65 mm)
A*	5" (125 mm)
K	5" (125 mm)
1	10" (250 mm)
2	20" (500 mm)
3	30" (750 mm)
4	40" (1000 mm)

** Supplied in packs of 3.*

Code	Micron
020	0.20 µm

Code	Endcap (10")
C	BF / 226 Bayonet
D	Fin / 222
E	Flat Top / 222
G	Recess / 222
R	BF / 222 Bayonet

Code	Endcap (Demi)
T	TRUESEAL
Y	Demi Stub
Z	Demi A & B Std

Code	Variant
P	Pharmaceutical

Code	O-rings
E	EPDM
S	Silicone
V	Viton

MURUS Capsules

ZLBR [ ] - [ ] [ ] [ ] - [ ] [ ] [ ] - [ ]

Code	Length (Nominal)
K	5" (125 mm)
1	10" (250 mm)
2	20" (500 mm)
3	30" (750 mm)

Code	Micron
020	0.2 µm

Code	Inlet Connection
A	3/4" Tri-Clamp
B	1 1/2" Tri-Clamp
D	1" Hosebarb
T	1" Tri-Clamp

Code	Outlet Connection
A	3/4" Tri-Clamp
B	1 1/2" Tri-Clamp
D	1" Hosebarb
T	1" Tri-Clamp

Code	Variant
P	Pharmaceutical

Code	Grade
N	Non-sterile
S	Pre-sterilized γ (>25 kGy)

Code	Design
L	In-Line
T*	T-Port

**Only available with a 1" Tri-Clamp*

Code	O-rings
E	EPDM
S*	Silicone
V	Viton

** Silicone o-ring supplied as standard without having to specify the 'S' code.*

DEMICAP Capsules

ZEBR [ ] - [ ] [ ] [ ] - [ ] [ ] [ ] - [ ]

Code	Length (Nominal)
E	4.4" (113 mm)
B	5.5" (140 mm)
A	7.9" (200 mm)

Code	Micron
020	0.2 µm

Code	Inlet Connection
T	1" Tri-Clamp
N	1/2" NPT Male
H	1/2" Hosebarb
G	Stepped Hosebarb
M	1/4" NPT Male
Q	Walther QC
R	Grommel / QC

Code	Outlet Connection
T	1" Tri-Clamp
N	1/2" NPT Male
H	1/2" Hosebarb
G	Stepped Hosebarb
M	1/4" NPT Male
Q	Walther QC
R	Grommel / QC

Code	Variant
P	Pharmaceutical

Code	Grade
N	Non-sterile
S	Pre-sterilized γ (>25 kGy)

Code	Pack N°
3	Pack of 3

Code	Accessory
FB	Filling Bell

G & H connections only

Syringe Filters

ZSBR [ ] - [ ] [ ] [ ] - [ ] [ ] [ ] [ ]

Code	Diameter
050	50 mm

Code	Micron
020	0.2 µm

Code	Inlet Connection
F	Female Luer Lock
G	Stepped Hosebarb

Code	Outlet Connection
F	Female Luer Lock
G	Stepped Hosebarb

Code	Variant
P	Pharmaceutical

Code	Grade
N	Non-sterile

Code	Options
S	Standard

Code	Pack N°
025	25 per box

Europe: +44 (0)191 4105121 dhprocess@parker.com - North America: toll free 877 784 2234 +1 805 604 3400 dhpsales.na@parker.com www.parker.com/dhpharma

Parker domnick hunter has a continuous policy of product development and although the Company reserves the right to change specifications, it attempts to keep customers informed of any alterations. This publication is for general information only and customers are requested to contact our Process Filtration Sales Department for detailed information and advice on a products suitability for specific applications. All products are sold subject to the company's Standard conditions of sale.

ENERGOEKONOM spol. s r.o., Wolkerova 433, CZ-250 82 Úvaly, Czech Republic, Tel.: +420 281 981 055, info@energoekonom.cz, www.energoekonom.cz

PROPOR HC Filters

- liquid filters
- polyethersulphone

PROPOR HC sterilizing grade filters have been specifically designed for the effective and economical processing of difficult to filter solutions.

The optimized PROPOR HC PES membrane configuration features a highly asymmetric membrane prefilter layer, which significantly extends throughput and prevents the problems associated with premature filter blockage with complex solutions.

PROPOR HC filters are high capacity and fast flowing. The PES membrane is inherently low binding, which minimizes product loss due to protein or preservative adsorption. The filters have low extractable levels and broad chemical compatibility.

Note: PROPOR and DEMICAP are registered trademarks of Parker Hannifin Corporation.

Features and Benefits

- Optimized membrane configuration allows up to ten times the throughput compared to single layer membrane products
- Integral prefilter layer can condense filter trains for greater processing economy
- Incorporates a fully validated and integrity testable 0.2 micron membrane for assurance of sterility
- Low binding for minimal product loss

Performance Characteristics

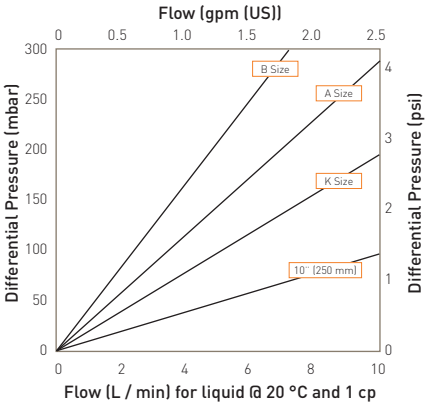

Cartridge flow rates

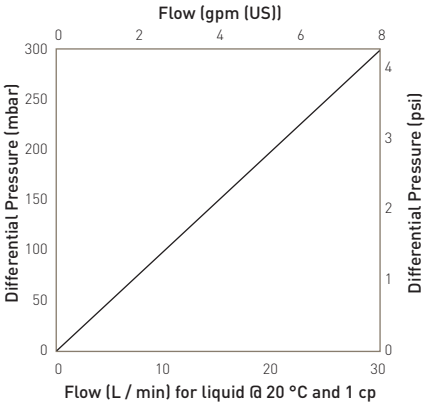

MURUS flow rates (10¨ Size (250 mm)

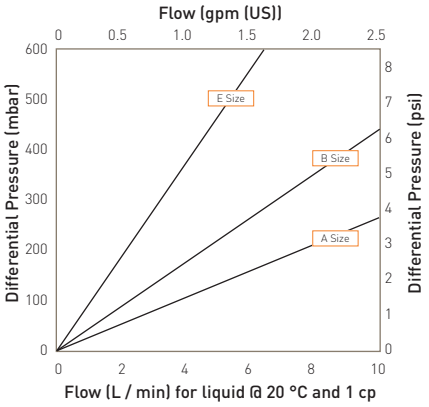

DEMICAP flow rates

Specifications

Materials of Construction

- Filtration Membrane: Polyethersulphone
- Prefilter Membrane: Polyethersulphone
- Upstream Support: Polyester
- Downstream Support: Polyester

Filter Cartridges

- Inner Support Core: Polypropylene
- Outer Protection Cage: Polypropylene
- End Caps: Nylon
- End Caps Insert: 316L Stainless Steel

MURUS Disposable Filter Capsules

- Core: Polypropylene
- Sleeve: Polypropylene
- End Caps Insert: 316L Stainless Steel
- Standard o-rings/gaskets: Silicone
- Capsule Body: Polypropylene
- Capsules Vent Seals: Silicone

DEMICAP Filter Capsules

- Core: Polypropylene
- Sleeve: Polypropylene
- End Caps: Nylon
- Capsule Body: Nylon
- Capsules Vent Seals: Silicone
- Filling Bell: Polycarbonate

Syringe Filters

- Body: Polypropylene

Recommended Operating Conditions

Filter Cartridges

Up to 70 °C (158 °F) continuous operating temperature and higher short-term temperatures during CIP to the following limits:

Temperature °C	Temperature °F	Max. Forward dP (bar)	Max. Forward dP (psi)
20	68	5.0	72.5
40	104	4.0	58.0
60	140	3.0	43.5
80	176	2.0	29.0
90	194	1.7	24.6

MURUS Disposable Filter Capsules

Up to 25 °C (77 °F) @ 5.5 barg (79.7 psig)
Up to 60 °C (140 °F) @ 2.8 barg (40.6 psig)

Parker Hannifin certify that this product complies with the current European Council Pressure Equipment Directive (PED) - Sound Engineering Practice (SEP). This product is intended for use with Group 1 & 2 Dangerous and Harmless Liquids and Group 2 Harmless Gases at the operating conditions stated in this document. The Pressure Equipment Directive mandates that category SEP product cannot bear the CE mark.

DEMICAP Filter Capsules

Up to 40 °C (104 °F) at line pressures up to 5.0 barg (72 psig).

Effective Filtration Area (EFA)

10" (250 mm):	0.55 m^2	(5.92 ft^2)
K Size:	0.26 m^2	(2.79 ft^2)
A Size:	0.20 m^2	(2.15 ft^2)
B Size:	0.10 m^2	(1.07 ft^2)
E Size:	0.05 m^2	(0.53 ft^2)
Syringe ø50 mm:	14.50 cm^2	(2.25 in^2)

Sterilization

	Autoclave Cycles	Autoclave Temp	Steam-in-Place Cycles (30 min.)	Steam-in-Place Temp
Cartridges	10	130 °C (266 °F)	30	130 °C (266 °F)
MURUS	5	130 °C (266 °F)	-	-
DEMICAP	10	130 °C (266 °F)	-	-
Syringe	1	130 °C (266 °F)	-	-

PROPOR HC filter cartridges can be sanitized with hot water at up to 90 °C (194 °F) and are compatible with a wide range of chemicals.

For detailed operational procedures and advice on cleaning and sterilization, please contact the Technical Support Group through your usual Parker domnick hunter contact.

Biological Safety

Materials conform to the relevant requirements of 21CFR Part 177 and current USP Plastics Class VI - 121 °C and ISO10993 equivalents.

Quality Standards

Pharmaceutical grade products are manufactured in accordance with cGMP, 100% flushed with pharmaceutical grade purified water and integrity tested prior to despatch. A sample of each lot is tested to demonstrate conformity to validated claims.

Gamma-Irradiation

PROPOR HC MURUS & DEMICAP disposable filters can be gamma-irradiated up to a maximum dosage of 40 kGy.

Performance Characteristics

TOC / Conductivity
The filtrate quality from a 10" (250 mm) PROPOR HC conforms to the requirements of current USP <643> (TOC) and USP <645> (conductivity) within the first 200 ml flush of purified water.

Endotoxins
Aqueous extracts from the 10" (250 mm) PROPOR HC contain < 0.25 EU / ml when tested in accordance with the Limulus Amoebocyte Lysate test.

Non-Volatile Extractables (NVE)
Total NVEs extracted in the first 5 litre flush of purified water for a 10" (250 mm) cartridge are <10 mg.

Total NVEs extracted in the first 5 litre flush of purified water for an A size 7.9" (200 mm) DEMICAP capsule are <5 mg.

Pharmaceutical Validation
A full validation guide is available upon request from Laboratory Services Group (LSG).

Oxidizable Substances
PROPOR HC filter cartridges meet current USP and EP quality standards for sterile purified water for oxidizable substances following a <1 litre water flush.

Integrity Test Data
All filters are integrity testable to the following limits when wet with water and using air as the test gas.

Micron Rating		0.2
Filter Cartridges / MURUS / DEMICAP / Syringe Filters		
Min. Bubble Point	(barg)	3.4
	(psig)	49.0
Filter Cartridges / MURUS / DEMICAP / Syringe Filters		
Diffusional Flow	(barg)	2.8
Test Pressure	(psig)	40.6
Filter Cartridges / MURUS / DEMICAP / Syringe Filters		
Max. Diffusional Flow (10")		18.0
(ml / min)	(K)	8.4
	(A)	6.7
	(B)	3.2
	(E)	1.4

Retention Characteristics
PROPOR HC filter cartridges are validated by bacterial challenge testing with *Brevundimonas diminuta* to current ASTM F838 methodology (10^7 organisms / cm^2 EFA minimum) with typical in-house challenge levels being 10^{11} organisms per 10" (250 mm) filter cartridge.

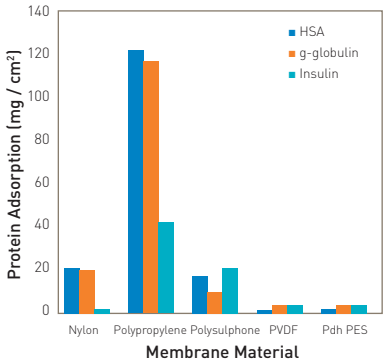

Protein binding on membrane materials

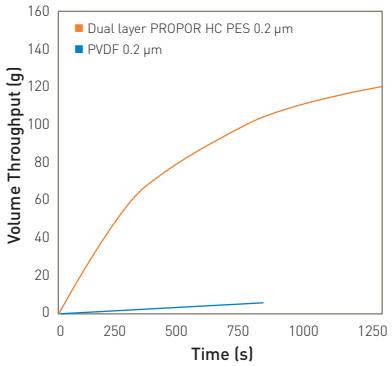

Total volume throughput (g) vs time (s) for an insulin intermediate solution

Ordering Information

Cartridges

ZCHC ☐ - ☐ ☐ - ☐ ☐

Code	Length (Nominal)
B*	2.5" (65 mm)
A*	5" (125 mm)
K	5" (125 mm)
1	10" (250 mm)
2	20" (500 mm)
3	30" (750 mm)
4	40" (1000 mm)

* Supplied in packs of 3.

Code	Micron
620	0.20 µm

Code	Endcap (10")
C	BF / 226 Bayonet
D	Fin / 222
E	Flat Top / 222
G	Recess / 222
R	BF / 222 Bayonet

Code	Endcap (Demi)
T	TRUESEAL
Y	Demi Stub
Z	Demi A & B Std

Code	Variant
P	Pharmaceutical

Code	O-rings
E	EPDM
S	Silicone
V	Viton

MURUS Capsules

ZLHC ☐ - ☐ ☐ ☐ - ☐ ☐ ☐ - ☐

Code	Length (Nominal)
K	5" (125 mm)
1	10" (250 mm)
2	20" (500 mm)
3	30" (750 mm)

Code	Micron
620	0.2 µm

Code	Inlet Connection
A	3/4" Tri-Clamp
B	1 1/2" Tri-Clamp
D	1" Hosebarb
T	1" Tri-Clamp

Code	Outlet Connection
A	3/4" Tri-Clamp
B	1 1/2" Tri-Clamp
D	1" Hosebarb
T	1" Tri-Clamp

Code	Variant
P	Pharmaceutical

Code	Grade
N	Non-sterile
S	Pre-sterilized γ (>25 kGy)

Code	Design
L	In-Line
T*	T-Port

*Only available with a 1" Tri-Clamp

Code	O-rings
E	EPDM
S*	Silicone
V	Viton

* Silicone o-ring supplied as standard without having to specify the 'S' code.

DEMICAP Capsules

ZEHC ☐ - ☐ ☐ ☐ - ☐ ☐ ☐ - ☐

Code	Length (Nominal)
E	4.4" (113 mm)
B	5.5" (140 mm)
A	7.9" (200 mm)

Code	Micron
620	0.2 µm

Code	Inlet Connection
T	1" Tri-Clamp
N	1/2" NPT Male
H	1/2" Hosebarb
G	Stepped Hosebarb
M	1/4" NPT Male
Q	Walther QC
R	Grommel / QC

Code	Outlet Connection
T	1" Tri-Clamp
N	1/2" NPT Male
H	1/2" Hosebarb
G	Stepped Hosebarb
M	1/4" NPT Male
Q	Walther QC
R	Grommel / QC

Code	Variant
P	Pharmaceutical

Code	Grade
N	Non-sterile
S	Pre-sterilized γ (>25 kGy)

Code	Pack N°
3	Pack of 3

Code	Accessory
FB	Filling Bell

G & H connections only

Syringe Filters

ZSHC ☐ - ☐ ☐ ☐ - ☐ ☐ ☐ ☐

Code	Diameter
050	50 mm

Code	Micron
620	0.2 µm

Code	Inlet Connection
F	Female Luer Lock
G	Stepped Hosebarb

Code	Outlet Connection
F	Female Luer Lock
G	Stepped Hosebarb

Code	Variant
P	Pharmaceutical

Code	Grade
N	Non-sterile

Code	Options
S	Standard

Code	Pack N°
025	25 per box

Europe: +44 (0)191 4105121 dhprocess@parker.com - North America: toll free 877 784 2234 +1 805 604 3400 dhpsales.na@parker.com www.parker.com/dhpharma

Parker domnick hunter has a continuous policy of product development and although the Company reserves the right to change specifications, it attempts to keep customers informed of any alterations. This publication is for general information only and customers are requested to contact our Process Filtration Sales Department for detailed information and advice on a products suitability for specific applications. All products are sold subject to the company's Standard conditions of sale.

ENERGOEKONOM spol. s r.o., Wolkerova 433, CZ-250 82 Úvaly, Czech Republic, Tel.: +420 281 981 055, info@energoekonom.cz, www.energoekonom.cz

PROPOR MR Filters

- liquid filters
- polyethersulphone

PROPOR MR filters have been specifically designed for fast, effective and economical removal of mycoplasma from cell culture media in the biopharmaceutical industry.

Incorporating a highly retentive 0.1 micron rated PES membrane, PROPOR MR is validated against the industry standard *Brevundimonas diminuta* as well as *Acholeplasma laidlawii*, a common mycoplasma species found in contaminated cell cultures.

An asymmetric integral membrane prefilter layer provides PROPOR MR with the optimal membrane configuration for maximum capacity and flow rate. Quick processing times minimize the risk of contamination while still offering maximum protection from mycoplasma.

Note: PROPOR and DEMICAP are registered trademarks of Parker Hannifin Corporation.

Features and Benefits

- Fully validated and integrity testable for assurance of sterility
- A typical LRV of >10 for *Acholeplasma laidlawii* for effective mycoplasma control
- Integral prefilter layer increases throughputs for reduction of filter trains
- Exceptional flow rates for quick processing of cell culture media

Performance Characteristics

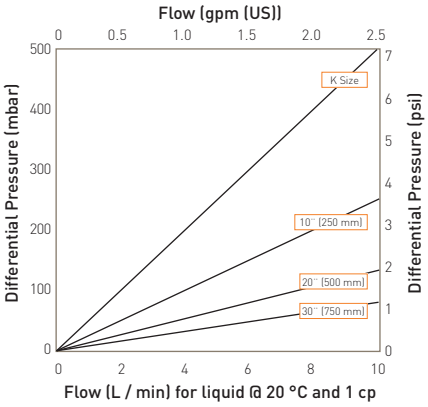

Cartridge & MURUS flow rates

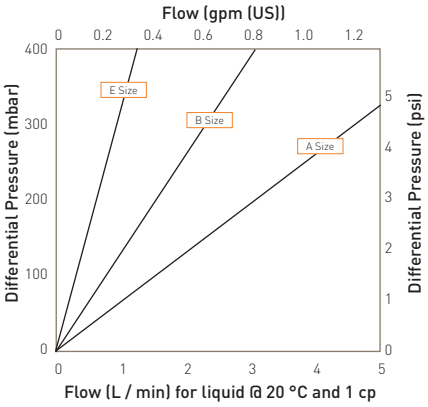

DEMICAP flow rates

Specifications

Materials of Construction

- Core: Polypropylene
- Sleeve: Polypropylene
- End Caps: Nylon
- Filtration Membrane: Polyethersulphone
- Prefilter Membrane: Polyethersulphone

Filter Cartridges

- Upstream Support: Polypropylene / Polyester
- Downstream Support: Polyester
- Standard o-rings/gaskets: Silicone

MURUS Disposable Filter Capsules

- Upstream Support: Polypropylene / Polyester
- Downstream Support: Polyester
- Standard o-rings/gaskets: Silicone
- Capsule Body: Polypropylene
- Capsules Vent Seals: Silicone

DEMICAP Disposable Filter Capsules

- Upstream Support: Polyester
- Downstream Support: Polyester
- Membrane Separation Layer: Polyester
- Capsule Body: Nylon
- Capsules Vent Seals: Silicone
- Filling Bell: Polycarbonate

Recommended Operating Conditions

Filter Cartridges

Up to 70 °C (158 °F) continuous operating temperature and higher short-term temperatures during CIP to the following limits:

Temperature °C	Temperature °F	Max. Forward dP (bar)	Max. Forward dP (psi)
20	68	5.0	72.5
40	104	4.0	58.0
60	140	3.0	43.5
80	176	2.0	29.0
90	194	1.7	24.6

MURUS Disposable Filter Capsules

Up to 25 °C (77 °F) @ 5.5 barg (79.7 psig)
Up to 60 °C (140 °F) @ 2.8 barg (40.6 psig)

Parker Hannifin certify that this product complies with the current European Council Pressure Equipment Directive (PED) - Sound Engineering Practice (SEP). This product is intended for use with Group 1 & 2 Dangerous and Harmless Liquids and Group 2 Harmless Gases at the operating conditions stated in this document. The Pressure Equipment Directive mandates that category SEP product cannot bear the CE mark.

DEMICAP Disposable Filter Capsules

Up to 40 °C 104 °F) at line pressures up to 5.0 barg (72 psig).

Effective Filtration Area (EFA)

10" (250 mm):	0.50	m^2	(5.38 ft^2)
K Size:	0.24	m^2	(2.58 ft^2)
A Size:	0.19	m^2	(2.09 ft^2)
B Size:	0.10	m^2	(1.03 ft^2)
E Size:	0.05	m^2	(0.49 ft^2)

	Autoclave Cycles	Autoclave Temp	Steam-in-Place Cycles (30 min.)	Steam-in-Place Temp
Cartridges	10	130 °C (266 °F)	5	130 °C (266 °F)
MURUS	10	130 °C (266 °F)	-	-
DEMICAP	3	130 °C (266 °F)	-	-

Sterilization

PROPOR MR filter cartridges can be sanitized with hot water at up to 90 °C (194 °F) and are compatible with a wide range of chemicals.

For detailed operational procedures and advice on cleaning and sterilisation, please contact the Technical Support Group through your usual Parker domnick hunter contact.

Food and Biological Safety

Materials conform to the relevant requirements of 21CFR Part 177 and current USP Plastics Class VI - 121 °C and ISO10993 equivalents.

Quality Standards

Pharmaceutical grade products are manufactured in accordance with cGMP, 100% flushed with pharmaceutical purified water and integrity tested prior to despatch. A sample of each lot is tested to demonstrate conformity to validated claims.

Gamma-Irradiation

PROPOR MR MURUS disposable filters can be gamma-irradiated up to a maximum dosage of 40 kGy.

Performance Characteristics

TOC / Conductivity
The filtrate quality from a 10" (250 mm) PROPOR MR conforms to the requirements of current USP <645> (conductivity) within the first 1L flush of purified water and USP <643> (TOC) following a 10L flush.

Endotoxins
Aqueous extracts from the 10" (250 mm) PROPOR MR contain < 0.25 EU / ml when tested in accordance with the Limulus Amoebocyte Lysate test.

Non-Volatile Extractables (NVE)
Total NVEs extracted in the first 1 litre flush of purified water for a 10" (250 mm) cartridge / MURUS capsule are <15 mg.

Pharmaceutical Validation
A full validation guide is available upon request from Laboratory Services Group (LSG).

Oxidisable Substances
PROPOR MR filter cartridges meet current USP and EP quality standards for sterile purified water for oxidisable substances following a <1 litre water flush.

Integrity Test Data
All filters are integrity testable to the following limits using air as the test gas. During diffusional flow tests filters are wet with water. Bubble points are determined in 60 / 40 v/v IPA / Water.

Micron Rating		0.1
Filter Cartridges / MURUS / DEMICAP		
Min. Bubble Point	(barg)	2.36
	(psig)	34.2
Filter Cartridges / MURUS / DEMICAP		
Diffusional Flow	(barg)	4.80
Test Pressure	(psig)	69.6
Filter Cartridges / MURUS / DEMICAP		
Max. Diffusional Flow (10")	(ml / min)	24.2
	(K)	11.5
	(A)	9.3
	(B)	4.6
	(E)	2.2

Retention Characteristics
PROPOR MR filter cartridges are validated by bacterial challenge testing with *Brevundimonas diminuta* to current ASTM F838 methodology (10^7 organisms / cm^2 EFA minimum) with typical in-house challenge levels being 10^{11} organisms per 10" (250 mm) filter cartridge.

To demonstrate the mycoplasma retention capabilities of the PROPOR MR, bacterial challenge testing was conducted on a number of cartridges using *Acholeplasma laidlawii* as the challenge organism with typical LRVs greater than 10.

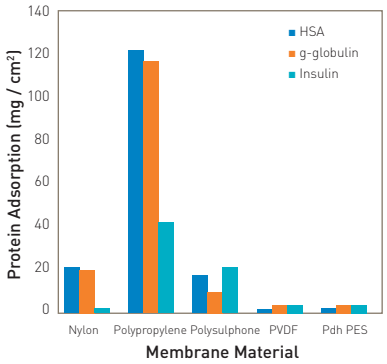

Protein binding on membrane materials

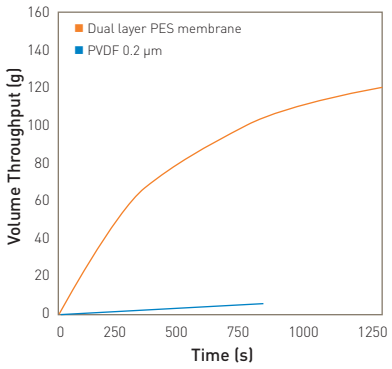

Total volume throughput (g) vs time (s) for an insulin intermediate solution

Ordering Information

Cartridges

ZCMR ☐ - ☐ ☐ - ☐ ☐

Code	Length (Nominal)
K	5" (125 mm)
1	10" (250 mm)
2	20" (500 mm)
3	30" (750 mm)
4	40" (1000 mm)

Code	Micron
610	0.1 µm

Code	Endcap (10")
B	dh DOE
C	BF / 226 Bayonet
G	Recess / 222
R	BF / 222 Bayonet

Code	Variant
P	Pharmaceutical

Code	O-rings[1]
E	EPDM[2]
S	Silicone
V	Viton

[1] Silicone o-ring supplied as standard without having to specify the 'S' code
[2] EPDM - Ethylene Propylene Diene Monomer Rubber

MURUS Capsules

ZLMR ☐ - ☐ ☐ ☐ - ☐ ☐ - ☐ ☐

Code	Length (Nominal)
K	5" (125 mm)
1	10" (250 mm)
2	20" (500 mm)
3	30" (750 mm)

Code	Micron
610	0.1 µm

Code	Inlet Connection
A	3/4" Tri-Clamp
B	1 1/2" Tri-Clamp
D	1" Hosebarb
T	1" Tri-Clamp

Code	Outlet Connection
A	3/4" Tri-Clamp
B	1 1/2" Tri-Clamp
D	1" Hosebarb
T	1" Tri-Clamp

Code	Variant
P	Pharmaceutical

Code	Grade
N	Non-sterile
S	Pre-sterilized γ (>25 kGy)

Code	Design
L	In-Line
T*	T-Port

*Only available with a 1" Tri-Clamp

Code	O-rings[1]
E	EPDM[2]
S	Silicone
V	Viton

[1] Silicone o-ring supplied as standard without having to specify the 'S' code
[2] EPDM - Ethylene Propylene Diene Monomer Rubber

DEMICAP Capsules

ZEMR ☐ - ☐ ☐ ☐ - ☐ ☐ ☐ - ☐

Code	Length (Nominal)
E	4.4" (113 mm)
B	5.5" (140 mm)
A	7.9" (200 mm)

Code	Micron
610	0.1 µm

Code	Inlet Connection
T	1" Tri-Clamp
N	1/2" NPT Male
H	1/2" Hosebarb
G	Stepped Hosebarb

Code	Outlet Connection
T	1" Tri-Clamp
N	1/2" NPT Male
H	1/2" Hosebarb
G	Stepped Hosebarb

Code	Variant
P	Pharmaceutical

Code	Grade
N	Non-sterile
S	Pre-sterilized γ (>25 kGy)

Code	Pack N°
3	Pack of 3

Code	Accessory
FB	Filling Bell

G & H connections only

Syringe Filters

ZSMR ☐ - ☐ ☐ ☐ - ☐ ☐ ☐ ☐

Code	Diameter
050	50 mm

Code	Micron
610	0.1 µm

Code	Inlet Connection
F	Female Luer Lock
G	Stepped Hosebarb

Code	Outlet Connection
F	Female Luer Lock
G	Stepped Hosebarb

Code	Variant
P	Pharmaceutical

Code	Grade
N	Non-sterile

Code	Options
S	Standard

Code	Pack N°
025	25 per box

Europe: +44 (0)191 4105121 dhprocess@parker.com - North America: toll free 877 784 2234 +1 805 604 3400 dhpsales.na@parker.com www.parker.com/dhpharma

Parker domnick hunter has a continuous policy of product development and although the Company reserves the right to change specifications, it attempts to keep customers informed of any alterations.
This publication is for general information only and customers are requested to contact our Process Filtration Sales Department for detailed information and advice on a products suitability for specific applications.
All products are sold subject to the company's Standard conditions of sale.

ENERGOEKONOM spol. s r.o., Wolkerova 433, CZ-250 82 Úvaly, Czech Republic, Tel.: +420 281 981 055, info@energoekonom.cz, www.energoekonom.cz

PROPOR SG Filters

- liquid filters
- polyethersulphone

PROPOR SG sterilizing grade filters feature a microbially retentive polyethersulphone membrane for fast, reliable and cost-effective sterile filtration of pharmaceutical fluids.

The asymmetric pore structure and high voids volume of the PROPOR SG membrane allow high throughputs and exceptionally high flow rates compared with competitive PES and alternative membranes. Low protein and preservative binding properties minimize product loss due to adsorption.

PROPOR SG filters are optimized for pharmaceutical processing. They have low extractable levels and broad chemical compatibility across the full pH range including organic solvents.

Note: PROPOR and DEMICAP are registered trademarks of Parker Hannifin Corporation.

Features and Benefits

- Up to 3.5 times higher flow rates than competitive sterilizing grade filters
- Fully validated and integrity testable membrane for assurance of sterility
- Low binding for minimal product loss
- MURUS and DEMICAPs can be gamma-irradiated and autoclaved

Performance Characteristics

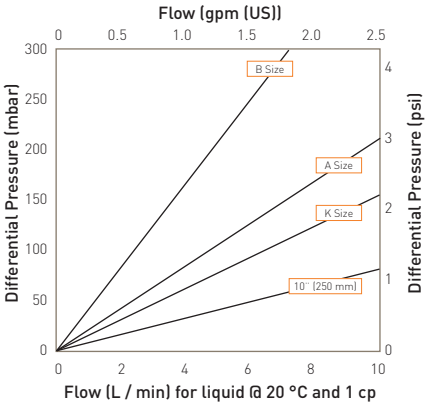

Cartridge flow rates
0.2 µm Cartridge

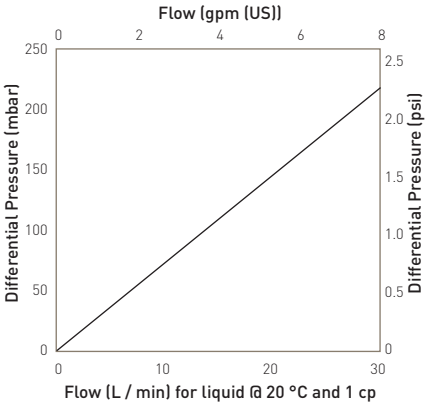

MURUS flow rates (10" Size (250 mm))
0.2 µm Capsule

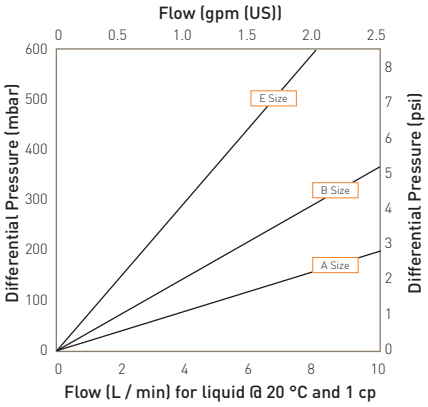

DEMICAP flow rates
0.2 µm Capsule

Specifications

Materials of Construction

- Filtration Membrane: Polyethersulphone
- Upstream Support: Polyester
- Downstream Support: Polyester

Filter Cartridges

- Inner Support Core: Polypropylene
- Outer Protection Cage: Polypropylene
- End Caps: Nylon
- End Caps Insert: 316L Stainless Steel

MURUS Disposable Filter Capsules

- Core: Polypropylene
- Sleeve: Polypropylene
- End Caps Insert: 316L Stainless Steel
- Standard o-rings/gaskets: Silicone
- Capsule Body: Polypropylene
- Capsules Vent Seals: Silicone

DEMICAP Filter Capsules

- Core: Polypropylene
- Sleeve: Polypropylene
- End Caps: Nylon
- Capsule Body: Nylon
- Capsules Vent Seals: Silicone
- Filling Bell: Polycarbonate

Syringe Filters

- Body: Polypropylene

Recommended Operating Conditions

Filter Cartridges

Up to 70 °C (158 °F) continuous operating temperature and higher short-term temperatures during CIP to the following limits:

Temperature °C	Temperature °F	Max. Forward dP (bar)	Max. Forward dP (psi)
20	68	5.0	72.5
40	104	4.0	58.0
60	140	3.0	43.5
80	176	2.0	29.0
90	194	1.7	24.6

MURUS Disposable Filter Capsules

Up to 25 °C (77 °F) @ 5.5 barg (79.7 psig)
Up to 60 °C (140 °F) @ 2.8 barg (40.6 psig)

Parker Hannifin certify that this product complies with the current European Council Pressure Equipment Directive (PED) - Sound Engineering Practice (SEP). This product is intended for use with Group 1 & 2 Dangerous and Harmless Liquids and Group 2 Harmless Gases at the operating conditions stated in this document. The Pressure Equipment Directive mandates that category SEP product cannot bear the CE mark.

DEMICAP Filter Capsules

Up to 40 °C (104 °F) at line pressures up to 5.0 barg (72 psig).

Effective Filtration Area (EFA)

10¨ (250 mm):	0.55 m^2	(5.92 ft^2)
K Size:	0.26 m^2	(2.79 ft^2)
A Size:	0.20 m^2	(2.15 ft^2)
B Size:	0.10 m^2	(1.07 ft^2)
E Size:	0.05 m^2	(0.53 ft^2)
Syringe ø50 mm:	14.50 cm^2	(2.25 in^2)

	Autoclave Cycles	Autoclave Temp	Steam-in-Place Cycles (30 min.)	Steam-in-Place Temp
Cartridges	10	130 °C (266 °F)	30	130 °C (266 °F)
MURUS	5	130 °C (266 °F)	-	-
DEMICAP	10	130 °C (266 °F)	-	-
Syringe	1	130 °C (266 °F)	-	-

Sterilization

PROPOR SG filter cartridges can be sanitized with hot water at up to 90 °C (194 °F) and are compatible with a wide range of chemicals.

For detailed operational procedures and advice on cleaning and sterilization, please contact the Technical Support Group through your usual Parker domnick hunter contact.

Biological Safety

Materials conform to the relevant requirements of 21CFR Part 177 and current USP Plastics Class VI - 121 °C and ISO10993 equivalents.

Quality Standards

Pharmaceutical grade products are manufactured in accordance with cGMP, 100% flushed with pharmaceutical grade purified water and integrity tested prior to despatch. A sample of each lot is tested to demonstrate conformity to validated claims.

Gamma-Irradiation

PROPOR SG MURUS & DEMICAP disposable filters can be gamma-irradiated up to a maximum dosage of 40 kGy.

Performance Characteristics

TOC / Conductivity
The filtrate quality from a 10¨ (250 mm) PROPOR SG conforms to the requirements of current USP <643> (TOC) and USP <645> (conductivity) within the first 200 ml flush of purified water.

Endotoxins
Aqueous extracts from the 10¨ (250 mm) PROPOR SG contain < 0.25 EU / ml when tested in accordance with the Limulus Amoebocyte Lysate test.

Non-Volatile Extractables (NVE)
Total NVEs extracted in the first 5 litre flush of purified water for a 10¨ (250 mm) cartridge are <10 mg.

Total NVEs extracted in the first 5 litre flush of purified water for an A size 7.9¨ (200 mm) DEMICAP capsule are <5 mg.

Pharmaceutical Validation
A full validation guide is available upon request from Laboratory Services Group (LSG).

Oxidizable Substances
PROPOR SG filter cartridges meet current USP and EP quality standards for sterile purified water for oxidizable substances following a <1 litre water flush.

Integrity Test Data
All filters are integrity testable to the following limits when wet with water and using air as the test gas.

**Bubble point for 0.1 µm product is in 60/40 v/v IPA/Water .*

Micron Rating		0.1	0.2	0.45
Filter Cartridges / MURUS / DEMICAP / Syringe FIlters				
Min. Bubble Point*	(barg)	2.36	3.38	2.48
	(psig)	34.2	49.0	36.0
Filter Cartridges / MURUS / DEMICAP / Syringe Filters				
Diffusional Flow	(barg)	4.8	2.8	1.7
Test Pressure	(psig)	69.6	40.6	24.9
Filter Cartridges / MURUS / DEMICAP / Syringe Filters				
Max. Diffusional Flow (10¨)		27.0	16.0	16.0
(ml / min)	(K)	12.6	7.5	7.5
	(A)	10.1	5.8	5.8
	(B)	4.9	2.9	2.9
	(E)	2.1	1.4	1.4

Retention Characteristics
PROPOR SG filter cartridges are validated by bacterial challenge testing with *Brevundimonas diminuta* to current ASTM F838 methodology (10^7 organisms / cm^2 EFA minimum) with typical in-house challenge levels being 10^{11} organisms per 10¨ (250 mm) filter cartridge.

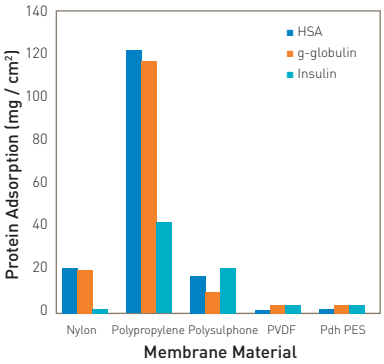

Protein binding on membrane materials

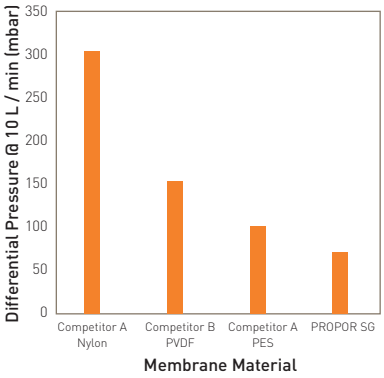

Differential pressure comparison of 10¨ (250 mm) sterilising grade filters

Ordering Information

Cartridges

ZCSG [ ] - [ ] [ ] - [ ] [ ]

Code	Length (Nominal)
B*	2.5" (65 mm)
A*	5" (125 mm)
K	5" (125 mm)
1	10" (250 mm)
2	20" (500 mm)
3	30" (750 mm)
4	40" (1000 mm)

* Supplied in packs of 3.

Code	Micron
010	0.10 µm
020	0.20 µm
045	0.45 µm

Code	Endcap (10")
C	BF / 226 Bayonet
D	Fin / 222
E	Flat Top / 222
G	Recess / 222
R	BF / 222 Bayonet

Code	Endcap (Demi)
SK	Retrofit
T	TRUESEAL
Y	Demi Stub
Z	Demi A & B Std

Code	Variant
P	Pharmaceutical

Code	O-rings
E	EPDM
S	Silicone
V	Viton

MURUS Capsules

ZLSG [ ] - [ ] [ ] [ ] - [ ] [ ] [ ] - [ ]

Code	Length (Nominal)
K	5" (125 mm)
1	10" (250 mm)
2	20" (500 mm)
3	30" (750 mm)

Code	Micron
010	0.10 µm
020	0.20 µm
045	0.45 µm

Code	Inlet Connection
A	3/4" Tri-Clamp
B	1 1/2" Tri-Clamp
D	1" Hosebarb
T	1" Tri-Clamp

Code	Outlet Connection
A	3/4" Tri-Clamp
B	1 1/2" Tri-Clamp
D	1" Hosebarb
T	1" Tri-Clamp

Code	Variant
P	Pharmaceutical

Code	Grade
N	Non-sterile
S	Pre-sterilized γ (>25 kGy)

Code	Design
L	In-Line
T*	T-Port

*Only available with a 1" Tri-Clamp

Code	O-rings
E	EPDM
S*	Silicone
V	Viton

* Silicone o-ring supplied as standard without having to specify the 'S' code.

DEMICAP Capsules

ZESG [ ] - [ ] [ ] [ ] - [ ] [ ] [ ] - [ ]

Code	Length (Nominal)
E	4.4" (113 mm)
B	5.5" (140 mm)
A	7.9" (200 mm)

Code	Micron
010	0.10 µm
020	0.20 µm
045	0.45 µm

Code	Inlet Connection
T	1" Tri-Clamp
N	1/2" NPT Male
H	1/2" Hosebarb
G	Stepped Hosebarb
M	1/4" NPT Male
Q	Walther QC
R	Grommel / QC

Code	Outlet Connection
T	1" Tri-Clamp
N	1/2" NPT Male
H	1/2" Hosebarb
G	Stepped Hosebarb
M	1/4" NPT Male
Q	Walther QC
R	Grommel / QC

Code	Variant
P	Pharmaceutical

Code	Grade
N	Non-sterile
S	Pre-sterilized γ (>25 kGy)

Code	Pack N°
3	Pack of 3

Code	Accessory
FB	Filling Bell

G & H connections only

Syringe Filters

ZSSG [ ] - [ ] [ ] [ ] - [ ] [ ] [ ] [ ]

Code	Diameter
050	50 mm

Code	Micron
010	0.10 µm
020	0.20 µm
045	0.45 µm

Code	Inlet Connection
F	Female Luer Lock
G	Stepped Hosebarb

Code	Outlet Connection
F	Female Luer Lock
G	Stepped Hosebarb

Code	Variant
P	Pharmaceutical

Code	Grade
N	Non-sterile

Code	Options
S	Standard

Code	Pack N°
025	25 per box

Europe: +44 (0)191 4105121 dhprocess@parker.com - North America: toll free 877 784 2234 +1 805 604 3400 dhpsales.na@parker.com www.parker.com/dhpharma

Parker domnick hunter has a continuous policy of product development and although the Company reserves the right to change specifications, it attempts to keep customers informed of any alterations. This publication is for general information only and customers are requested to contact our Process Filtration Sales Department for detailed information and advice on a products suitability for specific applications. All products are sold subject to the company's Standard conditions of sale.

ENERGOEKONOM spol. s r.o., Wolkerova 433, CZ-250 82 Úvaly, Czech Republic, Tel.: +420 281 981 055, info@energoekonom.cz, www.energoekonom.cz

PROPOR TFF autoclaveable

- tangential flow filtration
- modified polyethersulphone hollow fibre cartridges

PROPOR TFF autoclaveable hollow fibre filters provide maximum cross flow performance with minimal preparation and installation time while also allowing the flexibility of autoclave sterilization.

High flux, low fouling and low binding modified PES hollow fibre membrane technology offers consistent and fully scaleable performance in a broad range of applications.

PROPOR TFF autoclaveable filters are supplied glycerin free ready to use without the need for extensive pre-flushing.

Extremely robust, high performance advanced proprietary membrane chemistry offers long module lifetime with sustained high flux and productivity over prolonged periods of usage, such as in perfusion applications.

Note: PROPOR is a registered trademarks of Parker Hannifin Corporation.

Features and Benefits

- Ready to use cross flow filtration - no pre-rinse required
- Up to 80x reduction in extractables compared to glycerin conditioned membranes
- High flux, low fouling modified PES membrane for exceptional performance
- No cleaning required
- Self-contained hollow fibre filters - no hardware, no installation
- 100% integrity tested
- Able to be sterilized by autoclaving

PROPOR TFF autoclaveable filters offer minimal extractable levels with no water flush

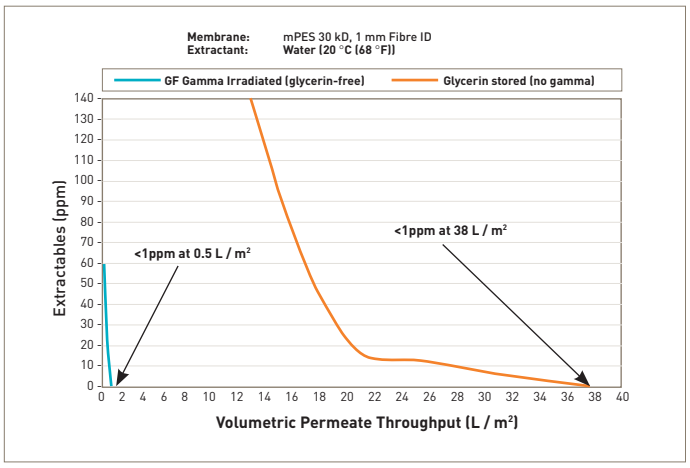

Extractable flush analysis: glycerin-free vs glycerin stored

Performance Characteristics

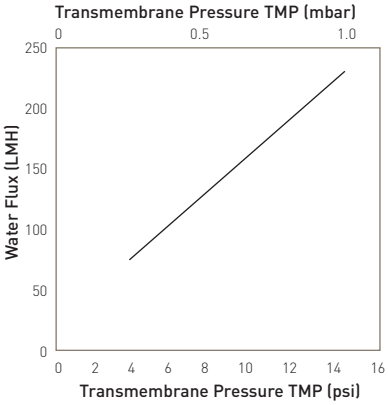

Clean water flux for a 12¨ PilotPlus 30K MWCO, 1.0mm ID

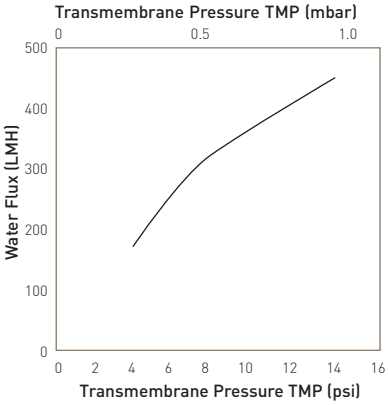

Clean water flux for a 12¨ PilotPlus 300K MWCO, 1.0mm ID

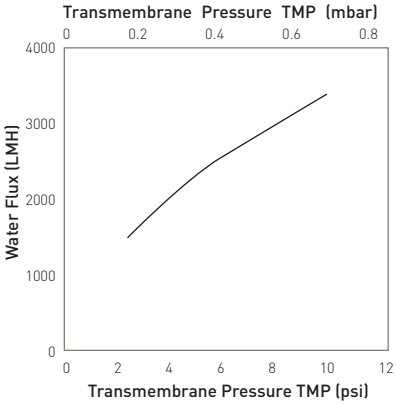

Clean water flux for a 12¨ PilotPlus 0.2 micron, 1.0mm ID

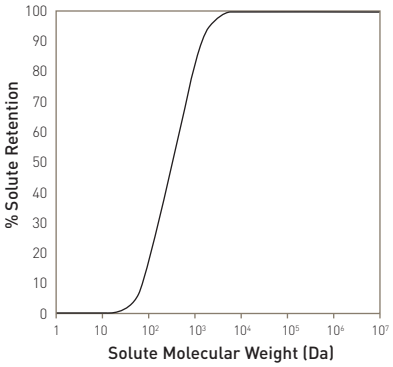

30K MWCO membrane solute retention

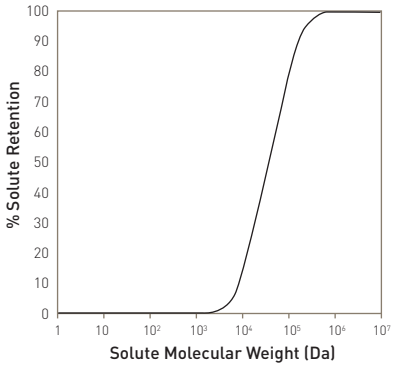

300K MWCO membrane solute retention

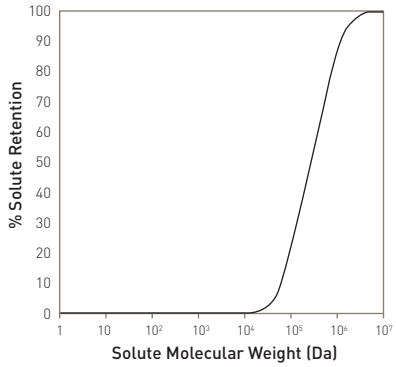

0.2 micron membrane solute retention

Typical Batch Sizes & Flow Rates by Product Format

		12 inch Fibre Length		24 inch Fibre Length		41 inch Fibre length	
Cartridge Type	Recommended Crossflow Rate (L/min)*	Recommended Batch Volume (L)	Recommended Permeate Flow Rate (L / h)	Recommended Batch Volume (L)	Recommended Permeate Flow Rate (L / h)	Recommended Batch Volume (L)	Recommended Permeate Flow Rate (L / h)
LabPlus	0.150 to 0.225	0.01 to 0.25	up to 0.125	0.05 to 0.4	up to 0.25	N/A	N/A
LabMax	0.50 to 0.70	0.15 to 0.75	up to 0.4	0.25 to 1.5	up to 0.8	0.3 to 3.0	up to 1.5
Pilot	1.5 to 2.1	0.4 to 2.0	up to 1.4	0.7 to 4.0	up to 2.5	1.0 to 8.0	up to 5.0
PilotPlus	4 to 6.5	1.0 to 6.0	up to 3.0	2.0 to 12.0	up to 6.0	3.0 to 25.0	up to 12.0
ProductionMini	15 to 20	5.0 to 50.0	up to 20.0	10.0 to 100.0	up to 40.0	25.0 to 200.0	up to 100.0
Production	30 to 40	25.0 to 100.0	up to 30.0	50.0 to 250.0	up to 70.0	100.0 to 500.0	up to 150.0

** Typical range based on 1 mm lumen diameter*

Specifications

Materials of Construction

- Membrane: Modified glycerin free polyethersulphone (PES)
- Internal Screens: Polypropylene
- Encapsulant: FDA compliant polyurethane
- Housing: White polysulphone

Sterilization

All PROPOR TFF autoclaveable hollow fibre filters are supplied pre-irradiated to prevent the requirement for use of an antimicrobial agent post-manufacture.

Filters are designed to be sterilized through additional autoclave cycles, and are validated to withstand up to 5 x 30 minute cycles at a maximum temperature of 121 °C (249.8 °F).

Compliance / Biological Safety

All materials of construction meet USP Class VI and Physiochemical Test For Plastics standards, and are compliant with FDA 21CFR parts 175 – 177 as relevant to the appropriate material type.

Quality Standards

All materials used in the construction of Parker domnick hunter hollow fibre filters are 100% lot traceable.

All membrane lots are tested to ensure conformity with retention, permeability and water flux specifications. All finished filters are tested for clean water flux, and cartridge / fibre integrity post manufacture.

Shelf-Life

Under recommended conditions (refer to product validation guide) unused PROPOR TFF filters can be stored for a period of up to 18 months following the date of manufacture without affecting product performance.

Product Dimensions & Membrane Area

		12 inch Fibre Length		24 inch Fibre Length		41 inch Fibre length	
Cartridge Type	Number of Fibres*	EFA	Nominal Module Dimensions (dia. x length) (mm)	EFA	Nominal Module Dimensions (dia. x length) (mm)	EFA	Nominal Module Dimensions (dia. x length) (mm)
LabPlus	6 or 12	52 cm^2	9 x 330	107 cm^2	9 x 619	N/A	N/A
LabMax	18 or 36	155 cm^2	13 x 305	320 cm^2	13 x 605	580 cm^2	13 x 1061
Pilot	54 or 108	444 cm^2	19 x 362	940 cm^2	19 x 668	0.17 m^2	19 x 1061
PilotPlus	160 or 320	0.13 m^2	33 x 305	0.20 m^2	33 x 605	0.50 m^2	33 x 1054
ProductionMini	800 or 1600	0.65 m^2	69x 381	1.35 m^2	69x 673	2.50 m^2	69x 1130
Production	1600 or 3200	1.25 m^2	89 x 381	2.72 m^2	89 x 673	5.00 m^2	89 x 1130

** Dictated by fibre lumen diameter (1.0 mm / 0.5 mm).*

Recommended Operating Conditions

Membrane Type	Maximum Feed Pressure		Maximum Transmembrane Pressure (TMP)		Maximum Temperature		pH Range
	barg	psig	barg	psig	° C	° F	
5K - 100K MWCO	2.76	40	2.41	35	60	140	2 to 13.5
300K - 500K MWCO	2.07	30	1.72	25	50	122	2 to 13.5
750K MWCO	1.72	25	1.38	20	50	122	2 to 13.5
0.1 µm	1.38	20	1.03	15	40	104	2 to 13.5
0.2 µm	1.03	15	0.69	10	40	104	2 to 13.5
0.45 µm	1.03	15	0.69	10	40	104	2 to 13.5

Parker Hannifin certify that this product complies with the current European Council Pressure Equipment Directive (PED) - Sound Engineering Practice (SEP). This product is intended for use with Group 1 & 2 Dangerous and Harmless Liquids and Group 2 Harmless Gases at the operating conditions stated in this document. The Pressure Equipment Directive mandates that category SEP product cannot bear the CE mark.

Ordering Information

TFFA [ ] - [ ] [ ] - [ ] [ ] [ ]

Code	Length (Nominal)*		
1	12 inch	304.8 mm	
2	24 inch	609.6 mm	
3	41 inch+	1041.4 mm	

**Nominal hollow-fibre length only, exact module dimensions vary by specific product format.*

+LabPlus format not available in 41 inch length.

Code	NMWC* / Micron Rating
003	3 kDa
005	5 kDa
010	10 kDa
030	30 kDa
050	50 kDa
100	100 kDa
300	300 kDa
500	500 kDa
750	750 kDa
910	0.1 µm
920	0.2 µm
945	0.45 µm

**NMWC = Nominal molecular weight cut-off*

Code	Diameter
10	1 mm
05	0.5 mm

Code	Cartridge Type
LP	LabPlus
LX	LabMax
PL	Pilot
PP	PilotPlus
PM	ProductionMini
PR	Production

Connector Type Code	Feed/ Retentate	Permeate	Availability
LL	Luer Lock	Luer Lock	LabPlus
05	$^1/_2$ inch TC	$^3/_{16}$ inch Barbed Hose	LabMax
07	$^3/_4$ inch TC	$^3/_8$ inch Barbed Hose	Pilot
15*	$1^1/_2$ inch TC	$^1/_2$ inch TC	PilotPlus
	$1^1/_2$ inch TC	$^3/_4$ inch TC	ProductionMini
	$1^1/_2$ inch TC	1 inch TC	Production
30	3 inch TC	1 inch TC	Production

**Code 15 specifies $^1/_2$ inch TC permeate connection on PilotPlus module format, $^3/_4$ inch TC permeate connection on ProductionMini and 1 inch TC permeate connection on Production.*

Code	Pack Qty	Available Formats
3	3	Pilot, PilotPlus, Production Mini & Production
6	6	All formats
0	12	LabPlus & LabMax

Parker domnick hunter has a continuous policy of product development and although the Company reserves the right to change specifications, it attempts to keep customers informed of any alterations. This publication is for general information only and customers are requested to contact our Process Filtration Sales Department for detailed information and advice on a products suitability for specific applications. All products are sold subject to the company's Standard conditions of sale.

Europe: +44 (0)191 4105121 dhprocess@parker.com - North America: toll free 877 784 2234 +1 805 604 3400 dhpsales.na@parker.com www.parker.com/dhpharma

ENERGOEKONOM spol. s r.o., Wolkerova 433, CZ-250 82 Úvaly, Czech Republic, Tel.: +420 281 981 055, info@energoekonom.cz, www.energoekonom.cz

PROPOR TFF reusable

- tangential flow filtration
- modified polyethersulphone hollow fibre cartridges

PROPOR TFF reusable hollow fibre filters provide maximum process performance and high product yield through the use of advanced low fouling modified PES membrane technology, while also allowing for more efficient post-use module cleaning.

High flux, low fouling and low binding modified PES hollow fibre membrane technology offers consistent and fully scaleable performance in a broad range of applications.

PROPOR TFF reusable filters are also completely caustic stable, allowing the filter to be repeatedly cleaned, sanitized and stored throughout the duration of a long service life without risk to product integrity.

Note: PROPOR is a registered trademarks of Parker Hannifin Corporation.

Features and Benefits

- High flux, low fouling modified PES membrane for exceptional performance
- Self-contained hollow fibre filters - no hardware, no installation
- 100% integrity tested
- Robust, caustic-stable materials of construction allow repeated chemical cleaning, sanitization and storage cycles

Performance Characteristics

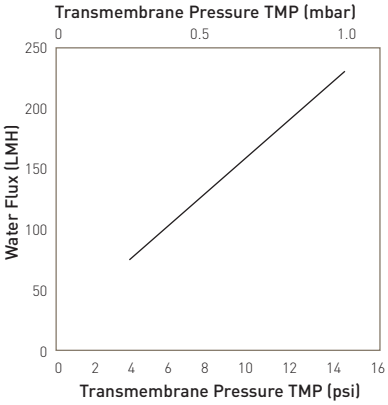

Clean water flux for a 12¨ PilotPlus 30K MWCO, 1.0mm ID

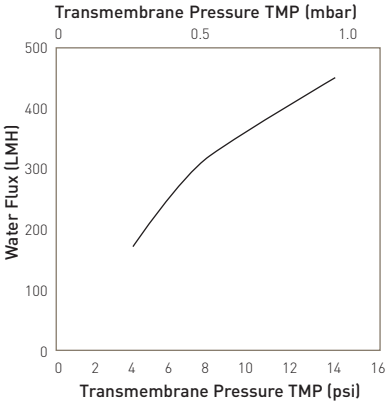

Clean water flux for a 12¨ PilotPlus 300K MWCO, 1.0mm ID

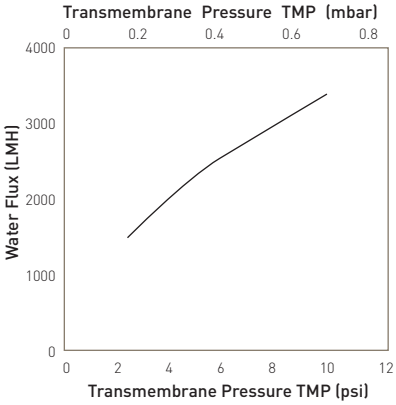

Clean water flux for a 12¨ PilotPlus 0.2 micron, 1.0mm ID

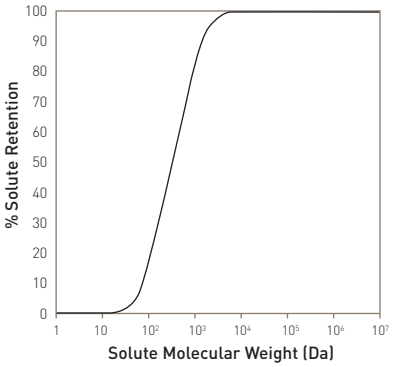

30K MWCO membrane solute retention

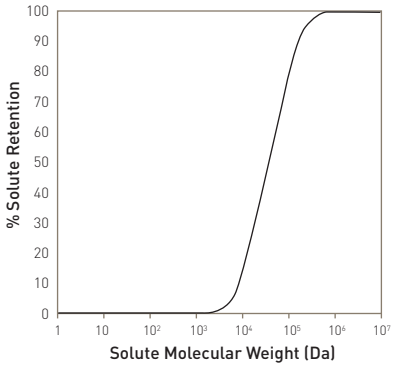

300K MWCO membrane solute retention

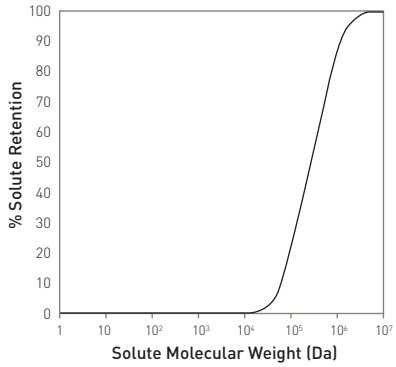

0.2 micron membrane solute retention

Typical Batch Sizes & Flow Rates by Product Format

		12 inch Fibre Length		24 inch Fibre Length		41 inch Fibre length	
Cartridge Type	Recommended Crossflow Rate (L/min)*	Recommended Batch Volume (L)	Recommended Permeate Flow Rate (L / h)	Recommended Batch Volume (L)	Recommended Permeate Flow Rate (L / h)	Recommended Batch Volume (L)	Recommended Permeate Flow Rate (L / h)
Lab	0.050 to 0.075	0.01 to 0.08	up to 0.05	0.01 to 0.125	up to 0.1	N/A	N/A
LabPlus	0.150 to 0.225	0.01 to 0.25	up to 0.125	0.05 to 0.4	up to 0.25	N/A	N/A
LabMax	0.50 to 0.70	0.15 to 0.75	up to 0.4	0.25 to 1.5	up to 0.8	0.3 to 3.0	up to 1.5
Pilot	1.5 to 2.1	0.4 to 2.0	up to 1.4	0.7 to 4.0	up to 2.5	1.0 to 8.0	up to 5.0
PilotPlus	4 to 6.5	1.0 to 6.0	up to 3.0	2.0 to 12.0	up to 6.0	3.0 to 25.0	up to 12.0
ProductionMini	15 to 20	5.0 to 50.0	up to 20.0	10.0 to 100.0	up to 40.0	25.0 to 200.0	up to 100.0
Production	30 to 40	25.0 to 100.0	up to 30.0	50.0 to 250.0	up to 70.0	100.0 to 500.0	up to 150.0
ProductionMax	60 to 80	N/A	N/A	100.0 to 500.0	100.0 to 500.0	300.0 to 1000.0	300.0 to 1000.0

** Typical range based on 1 mm lumen diameter*

Specifications

Materials of Construction

- Membrane: Modified polyethersulphone (PES)
- Internal Screens: Polypropylene
- Encapsulant: FDA compliant epoxy
- Housing: White polysulphone

Sanitization and Storage

All PROPOR TFF reusable hollow fibre filters are supplied containing sodium azide preservative solution. Together with the glycerin humectant contained within the membrane, this solution should be flushed from the filter prior to use.

The filters can be cleaned and sanitized, using sodium hydroxide solution (NaOH) at concentrations of up to 0.5M, and stored in 0.1M NaOH solution. Please refer to the product validation guide and standard operating procedure for specific guidance.

Compliance / Biological Safety

All materials of construction meet USP Class VI and Physiochemical Test For Plastics standards, and are compliant with FDA 21CFR parts 175 – 177 as relevant to the appropriate material type.

Quality Standards

All materials used in the construction of Parker domnick hunter hollow fibre filters are 100% lot traceable.

All membrane lots are tested to ensure conformity with retention, permeability and water-flux specifications. All finished filters are tested for clean water flux, and cartridge / fibre integrity post manufacture.

Shelf-Life

Under recommended conditions (refer to product validation guide) unused PROPOR TFF filters can be stored for a period of up to 24 months following the date of manufacture without affecting product performance.

Product Dimensions & Membrane Area

		12 inch Fibre Length		24 inch Fibre Length		41 inch Fibre length	
Cartridge Type	Number of Fibres*	EFA	Nominal Module Dimensions (dia. x length) (mm)	EFA	Nominal Module Dimensions (dia. x length) (mm)	EFA	Nominal Module Dimensions (dia. x length) (mm)
Lab	2 or 4	17 cm^2	9 x 330	36 cm^2	9 x 619	N/A	N/A
LabPlus	6 or 12	52 cm^2	9 x 330	107 cm^2	9 x 619	N/A	N/A
LabMax	18 or 36	155 cm^2	13 x 305	320 cm^2	13 x 605	580 cm^2	13 x 1061
Pilot	54 or 108	444 cm^2	19 x 362	940 cm^2	19 x 668	0.17 m^2	19 x 1061
PilotPlus	160 or 320	0.13 m^2	33 x 305	0.20 m^2	33 x 605	0.50 m^2	33 x 1054
ProductionMini	800 or 1600	0.65 m^2	69x 381	1.35 m^2	69x 673	2.50 m^2	69x 1130
Production	1600 or 3200	1.25 m^2	89 x 381	2.72 m^2	89 x 673	5.00 m^2	89 x 1130
ProductionMax	3200 or 6400	N/A	N/A	5.00 m^2	117 x 724	10.00 m^2	117 x 1181

** Dictated by fibre lumen diameter (1.0 mm / 0.5 mm).*

Recommended Operating Conditions

Membrane Type	Maximum Feed Pressure		Maximum Transmembrane Pressure (TMP)		Maximum Temperature		pH Range
	barg	psig	barg	psig	° C	° F	
5K - 100K MWCO	2.76	40	2.41	35	60	140	2 to 13.5
300K - 500K MWCO	2.07	30	1.72	25	50	122	2 to 13.5
750K MWCO	1.72	25	1.38	20	50	122	2 to 13.5
0.1 µm	1.38	20	1.03	15	40	104	2 to 13.5
0.2 µm	1.03	15	0.69	10	40	104	2 to 13.5
0.45 µm	1.03	15	0.69	10	40	104	2 to 13.5

Parker Hannifin certify that this product complies with the current European Council Pressure Equipment Directive (PED) - Sound Engineering Practice (SEP). This product is intended for use with Group 1 & 2 Dangerous and Harmless Liquids and Group 2 Harmless Gases at the operating conditions stated in this document. The Pressure Equipment Directive mandates that category SEP product cannot bear the CE mark.

Ordering Information

TFFR [ ] - [ ] [ ] - [ ] [ ] [ ]

Code	Length (Nominal)*	
1	12 inch	304.8 mm
2	24 inch	609.6 mm
3	41 inch+	1041.4 mm

**Nominal hollow fibre length only, exact module dimensions vary by specific product format.*

+ ProductionMax not available in 12 inch length.

^LabPlus format not available in 41 inch length.

Code	NMWC* / Micron Rating
003	3 kDa
005	5 kDa
010	10 kDa
030	30 kDa
050	50 kDa
100	100 kDa
300	300 kDa
500	500 kDa
750	750 kDa
910	0.1 µm
920	0.2 µm
945	0.45 µm

**NMWC = Nominal molecular weight cut-off*

Code	Diameter
10	1 mm
05	0.5 mm

Code	Cartridge Type
LA	Lab
LP	LabPlus
LX	LabMax
PL	Pilot
PP	PilotPlus
PR	Production
PM	ProductionMax

Connector Type

Code	Feed/ Retentate	Permeate	Availability
LL	Luer Lock	Luer Lock	LabPlus
05	$^1/_2$ inch TC	$^3/_{16}$ inch Barbed Hose	LabMax
07	$^3/_4$ inch TC	$^3/_8$ inch Barbed Hose	Pilot
15*	$1^1/_2$ inch TC	$^1/_2$ inch TC	PilotPlus
	$1^1/_2$ inch TC	$^3/_4$ inch TC	ProductionMini
	$1^1/_2$ inch TC	1 inch TC	Production
20	2 inch TC	$1^1/_2$ inch TC	ProductionMax
30	3 inch TC	1 inch TC	Production

**Code 15 specifies $^1/_2$ inch TC permeate connection on PilotPlus module format, $^3/_4$ inch TC permeate connection on ProductionMini and 1 inch TC permeate connection on Production.*

Code	Pack Qty	Available Formats
1	1	All formats
6	6	Lab & LabPlus

Parker domnick hunter has a continuous policy of product development and although the Company reserves the right to change specifications, it attempts to keep customers informed of any alterations. This publication is for general information only and customers are requested to contact our Process Filtration Sales Department for detailed information and advice on a products suitability for specific applications. All products are sold subject to the company's Standard conditions of sale.

Europe: +44 (0)191 4105121 dhprocess@parker.com - North America: toll free 877 784 2234 +1 805 604 3400 dhpsales.na@parker.com www.parker.com/dhpharma

ENERGOEKONOM spol. s r.o., Wolkerova 433, CZ-250 82 Úvaly, Czech Republic, Tel.: +420 281 981 055, info@energoekonom.cz, www.energoekonom.cz

PROPOR TFF single-use

- tangential flow filtration
- modified polyethersulphone hollow fibre cartridges

PROPOR TFF single-use hollow fibre filters provide maximum cross-flow performance with minimal preparation and installation time.

High flux, low fouling and low binding modified PES hollow fibre membrane technology offers consistent and fully scaleable performance in a broad range of applications.

Applying single-use technologies to tangential flow filtration reduces the risk of batch-to-batch contaminations, increases operational flexibility and decreases time to market through the elimination of cleaning, validation and storage protocols.

PROPOR TFF single-use filters are supplied glycerin-free, ready to use without the need for extensive pre-flushing. Set up time can be reduced even further when provided pre-integrated and irradiated as part of a Parker domnick hunter manifold.

Note: PROPOR is a registered trademark of Parker Hannifin Corporation.

Features and Benefits

- Ready to use cross flow filtration - no pre-rinse required
- Up to 80x reduction in extractables compared to glycerin conditioned membranes
- High flux, low fouling modified PES membrane for exceptional performance
- Plug-and-play - connect, use and discard
- No cleaning required
- Self-contained hollow fibre filters - no hardware, no installation
- 100% integrity tested
- Sterilizable by gamma-irradiation

PROPOR TFF single-use filters offer minimal extractable levels with no water flush

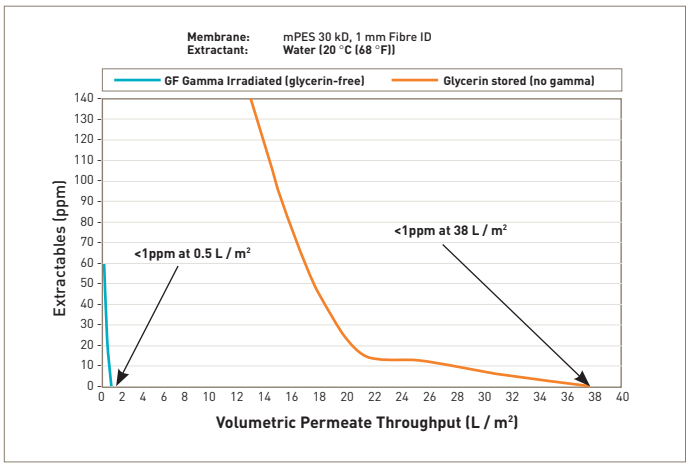

Extractable flush analysis: glycerin-free vs glycerin stored

Performance Characteristics

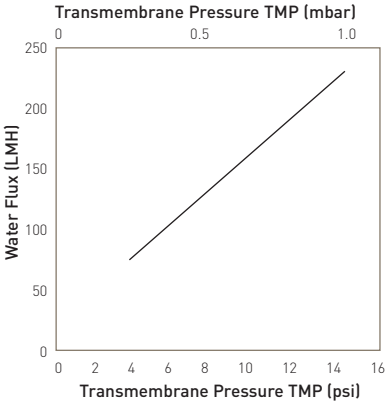

Clean water flux for a 12¨ PilotPlus 30K MWCO, 1.0mm ID

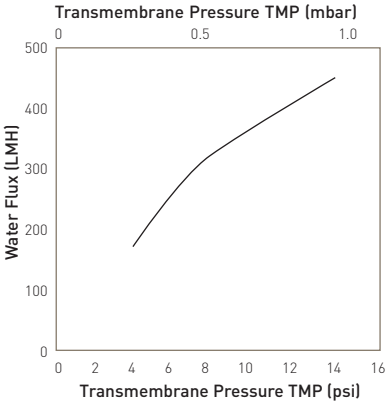

Clean water flux for a 12¨ PilotPlus 300K MWCO, 1.0mm ID

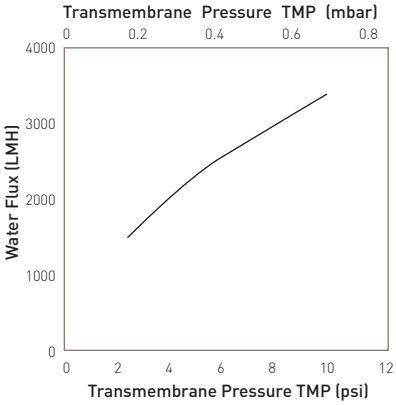

Clean water flux for a 12¨ PilotPlus 0.2 micron, 1.0mm ID

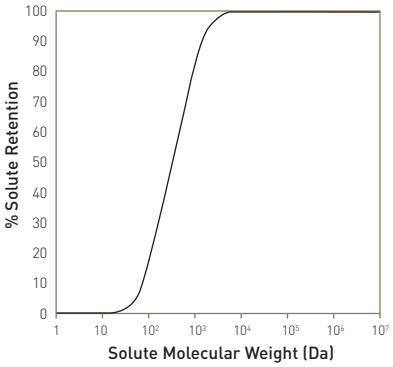

30K MWCO membrane solute retention

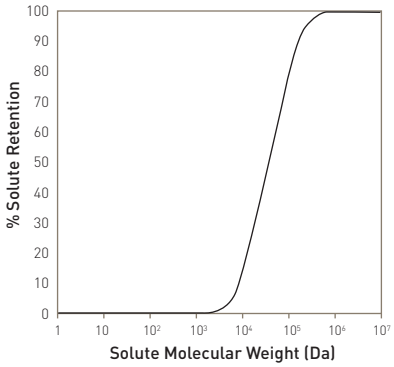

300K MWCO membrane solute retention

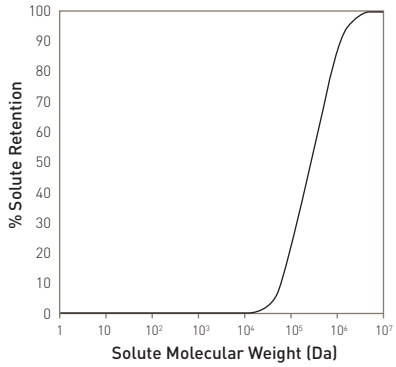

0.2 micron membrane solute retention

Typical Batch Sizes & Flow Rates by Product Format

		12 inch Fibre Length		24 inch Fibre Length		41 inch Fibre length	
Cartridge Type	Recommended Crossflow Rate (L/min)*	Recommended Batch Volume (L)	Recommended Permeate Flow Rate (L / h)	Recommended Batch Volume (L)	Recommended Permeate Flow Rate (L / h)	Recommended Batch Volume (L)	Recommended Permeate Flow Rate (L / h)
LabPlus	0.150 to 0.225	0.01 to 0.25	up to 0.125	0.05 to 0.4	up to 0.25	N/A	N/A
LabMax	0.50 to 0.70	0.15 to 0.75	up to 0.4	0.25 to 1.5	up to 0.8	0.3 to 3.0	up to 1.5
Pilot	1.5 to 2.1	0.4 to 2.0	up to 1.4	0.7 to 4.0	up to 2.5	1.0 to 8.0	up to 5.0
PilotPlus	4 to 6.5	1.0 to 6.0	up to 3.0	2.0 to 12.0	up to 6.0	3.0 to 25.0	up to 12.0
ProductionMini	15 to 20	5.0 to 50.0	up to 20.0	10.0 to 100.0	up to 40.0	25.0 to 200.0	up to 100.0
Production	30 to 40	25.0 to 100.0	up to 30.0	50.0 to 250.0	up to 70.0	100.0 to 500.0	up to 150.0
ProductionMax	60 to 80	N/A	N/A	100.0 to 500.0	100.0 to 500.0	300.0 to 1000.0	300.0 to 1000.0

** Typical range based on 1 mm lumen diameter*

Specifications

Materials of Construction

- Membrane: Modified glycerin-free polyethersulphone (PES)
- Internal Screens: Polypropylene
- Encapsulant: FDA compliant epoxy
- Housing: White polysulphone

Sterilization

All PROPOR TFF single-use hollow fibre filters are supplied pre-irradiated to prevent the requirement for use of an antimicrobial agent post-manufacture.

Filters are validated to withstand secondary irradiation dosage at 25 to 40kGy to allow sterilization as part of a larger system.

Compliance / Biological Safety

All materials of construction meet USP Class VI and Physiochemical Test for Plastics standards, and are compliant with FDA 21CFR parts 175 – 177 as relevant to the appropriate material type.

Quality Standards

All materials used in the construction of Parker domnick hunter hollow fibre filters are 100% lot traceable.

All membrane lots are tested to ensure conformity with retention, permeability and water-flux specifications. All finished filters are tested for clean water flux, and cartridge / fibre integrity post manufacture.

Shelf-Life

Under recommended conditions (refer to product validation guide) unused PROPOR TFF filters can be stored for a period of up to 24 months following the date of manufacture without affecting product performance.

Product Dimensions & Membrane Area

		12 inch Fibre Length		24 inch Fibre Length		41 inch Fibre length	
Cartridge Type	Number of Fibres*	EFA	Nominal Module Dimensions (dia. x length) (mm)	EFA	Nominal Module Dimensions (dia. x length) (mm)	EFA	Nominal Module Dimensions (dia. x length) (mm)
LabPlus	6 or 12	52 cm^2	9 x 330	107 cm^2	9 x 619	N/A	N/A
LabMax	18 or 36	155 cm^2	13 x 305	320 cm^2	13 x 605	580 cm^2	13 x 1061
Pilot	54 or 108	444 cm^2	19 x 362	940 cm^2	19 x 668	0.17 m^2	19 x 1061
PilotPlus	160 or 320	0.13 m^2	33 x 305	0.20 m^2	33 x 605	0.50 m^2	33 x 1054
ProductionMini	800 or 1600	0.65 m^2	69x 381	1.35 m^2	69x 673	2.50 m^2	69x 1130
Production	1600 or 3200	1.25 m^2	89 x 381	2.72 m^2	89 x 673	5.00 m^2	89 x 1130
ProductionMax	3200 or 6400	N/A	N/A	5.00 m^2	117 x 724	10.00 m^2	117 x 1181

** Dictated by fibre lumen diameter (1.0 mm / 0.5 mm).*

Recommended Operating Conditions

Membrane Type	Maximum Feed Pressure		Maximum Transmembrane Pressure (TMP)		Maximum Temperature		pH Range
	barg	psig	barg	psig	° C	° F	
5K - 100K MWCO	2.76	40	2.41	35	60	140	2 to 13.5
300K - 500K MWCO	2.07	30	1.72	25	50	122	2 to 13.5
750K MWCO	1.72	25	1.38	20	50	122	2 to 13.5
0.1 µm	1.38	20	1.03	15	40	104	2 to 13.5
0.2 µm	1.03	15	0.69	10	40	104	2 to 13.5
0.45 µm	1.03	15	0.69	10	40	104	2 to 13.5

Parker Hannifin certify that this product complies with the current European Council Pressure Equipment Directive (PED) - Sound Engineering Practice (SEP). This product is intended for use with Group 1 & 2 Dangerous and Harmless Liquids and Group 2 Harmless Gases at the operating conditions stated in this document. The Pressure Equipment Directive mandates that category SEP product cannot bear the CE mark.

Ordering Information

TFFS [ ] - [ ] [ ] - [ ] [ ] [ ]

Code	Length (Nominal)*	
1	12 inch+	304.8 mm
2	24 inch	609.6 mm
3	41 inch^	1041.4 mm

**Nominal hollow-fibre length only, exact module dimensions vary by specific product format.*

+ ProductionMax not available in 12 inch length.

^LabPlus format not available in 41 inch length.

Code	NMWC* / Micron Rating
003	3 kDa
005	5 kDa
010	10 kDa
030	30 kDa
050	50 kDa
100	100 kDa
300	300 kDa
500	500 kDa
750	750 kDa
910	0.1 µm
920	0.2 µm
945	0.45 µm

**NMWC = Nominal molecular weight cut-off*

Code	Diameter
10	1 mm
05	0.5 mm

Code	Cartridge Type
LA	Lab
LP	LabPlus
LX	LabMax
PL	Pilot
PP	PilotPlus
PM	ProductionMini
PR	Production
PX	ProductionMax

Connector Type			
Code	Feed/ Retentate	Permeate	Availability
LL	Luer Lock	Luer Lock	LabPlus
05	$^1/_2$ inch TC	$^3/_{16}$ inch Barbed Hose	LabMax
07	$^3/_4$ inch TC	$^3/_8$ inch Barbed Hose	Pilot
15*	$1^1/_2$ inch TC	$^1/_2$ inch TC	PilotPlus
	$1^1/_2$ inch TC	$^3/_4$ inch TC	ProductionMini
	$1^1/_2$ inch TC	1 inch TC	Production
20	2 inch TC	$1^1/_2$ inch TC	ProductionMax
30	3 inch TC	1 inch TC	Production

**Code 15 specifies $^1/_2$ inch TC permeate connection on PilotPlus module format, $^3/_4$ inch TC permeate connection on ProductionMini and 1 inch TC permeate connection on Production.*

Code	Pack Qty	Available Formats
1	1	ProductionMax
3	3	Pilot, PilotPlus, Production Mini & Production
6	6	LabPlus, LabMax, Pilot, PilotPlus, ProductionMini & Production
0	12	LabPlus & LabMax

Parker domnick hunter has a continuous policy of product development and although the Company reserves the right to change specifications, it attempts to keep customers informed of any alterations. This publication is for general information only and customers are requested to contact our Process Filtration Sales Department for detailed information and advice on a products suitability for specific applications. All products are sold subject to the company's Standard conditions of sale.

Europe: +44 (0)191 4105121 dhprocess@parker.com - North America: toll free 877 784 2234 +1 805 604 3400 dhpsales.na@parker.com www.parker.com/dhpharma

ENERGOEKONOM spol. s r.o., Wolkerova 433, CZ-250 82 Úvaly, Czech Republic, Tel.: +420 281 981 055, info@energoekonom.cz, www.energoekonom.cz

SciLog® SciCon® Sensors

- sensor technology
- pre-calibrated single-use or extended use

The only pre-calibrated, single-use conductivity sensors with a gamma-stable memory device that stores data of all calibration, and sensor specific information.

The SciLog® SciCon® combines temperature sensing capabilities with conductivity sensing capabilities in a compact, disposable, single-use package at a low price point. Each sensor is pre-programmed and barcoded with a unique ID for easy traceability and data documentation when combined with the SciLog® SciDoc software. Factory calibration data is also stored on each sensor's chip for out-of-box, plug and play use. The SciCon® comes in 5 different sizes to fit a variety of tubing sizes: Luer, $^{3}/_{8}$" barb, $^{1}/_{2}$" barb, $^{3}/_{4}$" Tri-Clover and 1" Tri-Clover Ladish.

Features and Benefits

- Pre-calibrated
- NIST-traceable
- Certified calibration
- Extended-use sensors (optional)
- Gamma-stable
- NaOH stable
- Autoclave stable
- Comprehensive customer support

Note: SciLog® & SciCon® is a registered trademark of Parker Hannifin Corporation.

The SciCon® fully integrates and optimizes most existing systems involving...

- Aseptic filtration
- Chromatography
- Reverse osmosis
- Ultrapure water
- Bags and manifolds

SciCon® Range & Accuracy

- High range: 0.1 - 200 mS range (± 0.25 mS Accuracy)
- Low range: 0 - 100 µS range (± 3 µS Accuracy)

Sensor Specifications

Sterilizability
- Can be sanitized — IPA 70%, NaOH (0.1N - 1.0N)
- Autoclavable: (1x)
- Gamma stable: 25-45 kGy

Material, Fluid Contact
- Medical grade polysulphone
- Meets USP Class VI and FDA 21CFR177.1520
- All wetted materials are made of animal-free compounds

Sensor Type
- 4-Electrode conductivity cell

Temperature Probe
- Thermistor

Sensor Microchip
- EPROM
- Stored sensor ID and calibration factor

Sensor Connector and Cables
- Dust and water proof IP67

SciCon® Family

Luer

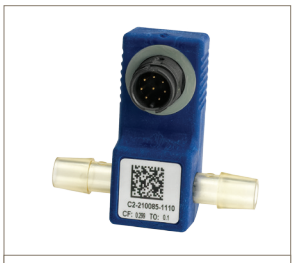
3/8" Barb

1/2" Barb

3/4" Tri-Clover

1" Tri-Clover 'Ladish'

Size, Part Codes and Specifications

Connector Type	Part Code (Packs of 5)	Compatible Tubing Sizes	Max. Flow Rate*	Max. Pressure
Luer	080-599PSX-5	ID 0.03" to 0.31"	1 L / min	60 psi
3/8" Barb	080-594PSX-5	ID 0.31" to 0.38"	8 L / min	60 psi
1/2" Barb	080-595PSX-5	ID 0.50"	17 L / min	60 psi
3/4" Tri-Clover (TC)	080-596PSX-5	Tubing with 3/4" TC	31 L / min	60 psi
1" Tri-Clover 'Ladish'	080-597PSX-5	Tubing with 1" TC Ladish	60 L / min	60 psi

* Maximum flow rate @ 1 psi

Monitor Specifications

Sensitivity Range
- 1 µS/cm to 200 mS/cm
- 0.1 µS/cm resolution

Operating Mode / Auto Range Display
- Conductivity: 1 µS/cm to 200 mS/cm
- Temperature: 0°C to 50°C

Analog Outputs
- 4-20 mA outputs
- 18 bit resolution

Digital Output
- RS-232

Alarm Outputs
- 4 TTL switches
- User-selectable hi/lo conductivity
- User-selectable hi/lo temperature

Power Supply
- 115/230 VAC

Description	Part Code
SciCon® Sensor Monitor	080-590 (110V)
	081-590 (220V)
Sensor Cable (Sensor to Monitor) - 6 ft	090-0491
Sensor Cable (Sensor to Monitor)- 12 ft	090-0491-12

Parker domnick hunter has a continuous policy of product development and although the Company reserves the right to change specifications, it attempts to keep customers informed of any alterations. This publication is for general information only and customers are requested to contact our Process Filtration Sales Department for detailed information and advice on a products suitability for specific applications. All products are sold subject to the company's Standard conditions of sale.

Europe: +44 (0)191 4105121 dhprocess@parker.com - North America: toll free 877 784 2234 +1 805 604 3400 dhpsales.na@parker.com www.parker.com/dhsingleuse

ENERGOEKONOM spol. s r.o., Wolkerova 433, CZ-250 82 Úvaly, Czech Republic, Tel.: +420 281 981 055, info@energoekonom.cz, www.energoekonom.cz

SciLog® SciPres® Sensors

- sensor technology
- pre-calibrated single-use or extended use

The only pre-calibrated, single-use pressure sensors with a gamma-stable memory device that stores data of all calibration, and sensor specific information.

The SciLog® SciPres® combines pressure sensing capabilities and the convenience of disposability with easy setup. Each sensor is preprogrammed with a unique ID for easy traceability and data documentation when combined with the SciLog® SciDoc software. Factory calibration data is also stored on each sensor's chip for out-of-box, plug and play use. The SciPres® comes in 5 different sizes to fit a variety of tubing sizes: Luer, $^{3}/_{8}$" barb, $^{1}/_{2}$" barb, $^{3}/_{4}$" Tri-Clover and 1" Tri-Clover Ladish.

Note: SciLog® & SciPres® are registered trademarks of Parker Hannifin Corporation.

Features and Benefits

- Pre-calibrated
- NIST-traceable
- Certified calibration
- Extended-use sensors (optional)
- Gamma-stable
- NaOH stable
- Autoclave stable
- Comprehensive customer support

The SciPres® fully integrates and optimizes most existing systems involving...

- Filtration
- Chromatography
- Reverse osmosis
- Fermentation
- Bags and manifolds

SciPres® Range & Accuracy

- Pressure range: -5 to 60 psi
- Pressure accuracy
  2-pt. calibration: ±0.3 psi, 0-30 psi range*
  3-pt. calibration: ±0.3 psi, 0-60 psi range

** Accuracy values define the maximum expected error reported by functioning sensors.*

Sensor Specifications

Sterilizability
- Can be sanitized: IPA 70%, NaOH (0.1N - 1.0N)
- Autoclavable: (1x)
- Gamma stable: 25-45 kGy*

Material, Fluid Contact
- Medical grade polysulphone meets USP Class VI and FDA 21CFR177.1520
- All wetted materials are made of animal-free compounds

Sensor Type
- Medical grade
- Resistive
- Sensing element with on-chip temperature compensation

Sensor Microchip
- EPROM
- Stored sensor ID and calibration factor

Sensor Connector and Cables
- Dust and water proof: IP67

SciPres® Family

Luer

3/8" Barb

1/2" Barb

3/4" Tri-Clover

1" Tri-Clover 'Ladish'

Size, Part Codes and Specifications

Connector Type	Part Code (Packs of 5)		Compatible Tubing Sizes	Max. Flow Rate**			Max. Operating Pressure
	2-pt. Calibration	3-pt. Calibration		(L / min)	(gpm / psi)	(m^3 / h / bar)	
Luer	080-699PSX-5	080-699PSX-3P-5	ID 0.03" to 0.31"	1.0	0.26	0.23	60 psi
3/8" Barb	080-694PSX-5	080-694PSX-3P-5	ID 0.31" to 0.38"	8.0	2.11	1.81	60 psi
1/2" Barb	080-695PSX-5	080-695PSX-3P-5	ID 0.50"	17.0	4.49	3.86	60 psi
3/4" Tri-Clover (TC)	080-696PSX-5	080-696PSX-3P-5	Tubing with 3/4" TC	31.0	8.19	7.03	60 psi
1" Tri-Clover 'Ladish'	080-697PSX-5	080-697PSX-3P-5	Tubing with 1" TC Ladish	60.0	15.9	13.6	60 psi

** At minimum dose, sensor accuracy is unaffected. At maximum dose accuracy may be reduced to ± 0.6 psi, 0-30 psi range. ** Maximum flow rate @ 1 psi*

Monitor Specifications

Sensor Inputs
- Up to three simultaneously

Sensor Readout
- P1, P2 and P3
- Differential pressure (dP)
- Transmembrane pressure (TMP)
- Display of dP and TMP are user-selectable

Analog Outputs
- 4-20 mA outputs for P1, P2, P3 and dP or TMP
- 18 bit resolution

Digital Output
- RS-232

Alarm Outputs
- 4 TTL switches
- User-selectable hi/lo pressure limit settings for P1, P2, P2 and dP or TMP

Power Supply
- Universal power supply

Description	Part Code
SciPres® Sensor Monitor	080-690 (110V)
	081-690 (220V)
Sensor Cable (Sensor to Monitor) - 6 ft	090-0491
Sensor Cable (Sensor to Monitor)- 12 ft	090-0491-12

Parker domnick hunter has a continuous policy of product development and although the Company reserves the right to change specifications, it attempts to keep customers informed of any alterations. This publication is for general information only and customers are requested to contact our Process Filtration Sales Department for detailed information and advice on a products suitability for specific applications. All products are sold subject to the company's Standard conditions of sale.

Europe: +44 (0)191 4105121 dhprocess@parker.com - North America: +1 608 824 0500 dhpsales.na@parker.com www.parker.com/dhsingleuse

ENERGOEKONOM spol. s r.o., Wolkerova 433, CZ-250 82 Úvaly, Czech Republic, Tel.: +420 281 981 055, info@energoekonom.cz, www.energoekonom.cz

SciLog® SciTemp® Sensors

- sensor technology
- pre-calibrated single-use or extended use

The only pre-calibrated, single-use temperature sensors with with a gamma-stable memory device that stores data of all calibration, and sensor specific information.

The SciLog® SciTemp® provides high precision temperature sensing capabilities in a compact, disposable package at a low price point. Each sensor is pre-programmed and barcoded with a unique ID for easy traceability and data documentation when combined with the SciLog® SciDoc software. Factory calibration data is also stored on each sensor's chip for out-of-box, plug and play use. The SciTemp® comes in 5 different sizes to fit a variety of tubing sizes: Luer, $^{3}/_{8}$¨ barb, $^{1}/_{2}$¨ barb, $^{3}/_{4}$¨ Tri-Clover and 1¨ Tri-Clover Ladish.

Note: SciLog® & SciTemp® is a registered trademark of Parker Hannifin Corporation.

Features and Benefits

- Pre-calibrated
- NIST-traceable
- Certified calibration
- Extended-use sensors (optional)
- Gamma-stable
- NaOH stable
- Autoclave stable
- Comprehensive customer support

The SciTemp® fully integrates and optimizes most existing systems involving...

- Filtration
- Chromatography
- Fermentation
- Bags and manifolds

SciTemp® Range & Accuracy

- Temperature range: 4 °C to 70 °C
- Temperature accuracy: ± 0.5°C

Sensor Specifications

Sterilizability
- Can be sanitized: IPA 70%, NaOH (0.1N - 1.0N)
- Autoclavable: (1x)
- Gamma stable: 25-45 kGy

Material, Fluid Contact
- Medical grade polysulphone
- Meets USP Class VI and FDA 21CFR177.1520
- All wetted materials are made of animal-free compounds

Sensor Type
- Thermistor
- Epoxy coated
- 2252 Ohms

Sensor Microchip
- EPROM
- Stored sensor ID and calibration factor

Sensor Connector and Cables
- Dust and water proof: IP67

SciTemp® Family

Luer

3/8" Barb

1/2" Barb

3/4" Tri-Clover

1" Tri-Clover 'Ladish'

Size, Part Codes and Specifications

Connector Type	Part Code (Packs of 5)	Compatible Tubing Sizes	Max. Flow Rate*	Max. Pressure
Luer	080-799PSX-5	ID 0.03" to 0.31"	1 L / min	60 psi
3/8" Barb	080-794PSX-5	ID 0.31" to 0.38"	8 L / min	60 psi
1/2" Barb	080-795PSX-5	ID 0.50"	17 L / min	60 psi
3/4" Tri-Clover (TC)	080-796PSX-5	Tubing with 3/4" TC	31 L / min	60 psi
1" Tri-Clover 'Ladish'	080-797PSX-5	Tubing with 1" TC Ladish	60 L / min	60 psi

** Maximum flow rate @ 1 psi*

Monitor Specifications

Sensor Inputs
- Up to two simultaneously

Sensor Readout
- T1 and T2
- Differential temperature (DT)

Analog Outputs
- 4-20 mA outputs for T1 and T2
- 18 bit resolution

Digital Output
- RS-232

Alarm Outputs
- 3 TTL switches
- User-selectable hi/lo pressure limit settings for T1, T2 and DT

Power Supply
- 115/230 VAC

Description	Part Code
SciTemp® Sensor Monitor	080-790 (110V)
	081-790 (220V)
Sensor Cable (Sensor to Monitor) - 6 ft	090-0491
Sensor Cable (Sensor to Monitor)- 12 ft	090-0491-12

Parker domnick hunter has a continuous policy of product development and although the Company reserves the right to change specifications, it attempts to keep customers informed of any alterations. This publication is for general information only and customers are requested to contact our Process Filtration Sales Department for detailed information and advice on a products suitability for specific applications. All products are sold subject to the company's Standard conditions of sale.

Europe: +44 (0)191 4105121 dhprocess@parker.com - North America: +1 608 824 0500 dhpsales.na@parker.com www.parker.com/dhsingleuse

ENERGOEKONOM spol. s r.o., Wolkerova 433, CZ-250 82 Úvaly, Czech Republic, Tel.: +420 281 981 055, info@energoekonom.cz, www.energoekonom.cz

HarvestClear® Filtration System

- intelligent bioprocessing system
- automated bioreactor clarification

Parker domnick hunter

The HarvestClear® Filtration System is a complete solution for cell culture harvest that provides fast, automated clarification of bioreactor outputs up to 20L. The system integrates SciLog fluid handling and pressure sensing expertise with the filtration excellence of Parker domnick hunter.

Simply connect your bioreactor to the sterile, ready-to-use filtration manifold, comprised of Parker domick hunter filters and SciPres® pressure sensors. Filtration is controlled by the FilterTec™ software-driven laboratory-scale normal flow filtration (NFF) system, teamed with a SciPres® pressure monitor. Three single-use filtration manifold sizes are available to clarify high cell density bioreactor outputs from 1L to 20L. The system can be connected to an optional WeighStation™ holding a single-use sterile bioprocess container to provide filtrate quantitation and precision flow metering.

Features and Benefits

- Walk-away automation reduces hands-on time, and optimizes filtration outputs.
- In-line SciPres® pressure sensors coupled with FilterTec™ controller ensure operator safety.
- Fully assembled, sterile filtration manifolds are ready-to-use with pre-flushed filters.
- Three filter manifold sizes to handle high density cell concentrations from 1-20L.
- Sterile single-use bioprocess containers are also available.

Note: HarvestClear®, FilterTec™ and SciPres® are trademarks of Parker Hannifin Corporation.

Single-Use Filtration Manifolds

The three sizes of single-use, sterile filtration manifolds are gamma irradiated and are comprised of the pre-flushed filters indicated, with Luer connectors, tubing and SciPres® pressure sensors. Sterile single-use bioprocess containers to collect the filtrate are available separately.

Bioreactor Output	PROCLEAR GF (Prefiltration)	PROPOR HC (Sterilizing-Grade)
1-5L	10"	10"
5-10L	20"	10"
10-20L	30"	10"

Walk-Away Automation

The FilterTec™ controller offers four operational modes, constant rate, constant pressure, R/P Stat and manual modes. Using input from the in-line SciPres® pressure sensors, the FilterTec™ controller automatically adjusts and documents prefilter back pressure, as well as permeate flow rate to optimize filtration speed and maximize filter throughput. User selectable alarms allow automatic stopping once a given filter back pressure or minimum filtrate flow rate is reached. The patented R/P Stat Method has been proven to increase filter throughput by up to 30%. The automatic documentation and alarm /pump stop settings allow the user to focus on other tasks while the system is running. Integration of a balance with the system enables gravimetric end point control.

Increased Safety

The automated HarvestClear® Filtration System also increases operator safety. The FilterTec™ controller can be programmed to shut down at a maximum pressure, ensuring no damage to the filters or manifold, which could otherwise lead to operator injury, or potent proteins being discharged into the working environment.

R/P Stat Mode

The FilterTec™ controller incorporates the patented R/P Stat Method, an innovation which offers significant improvements in filter output. The R/P Stat Method enables constant pressure or constant rate NFF via a pump / monitor PID loop including disposable inline pressure sensors. This is done by selecting three simple process variables including initial flow rate, maximum inlet pressure and minimum flow rate. By using the R/P Stat Method, the FilterTec™ controller operates at constant rate until it reaches the maximum pressure, then the controller switches to constant pressure and dynamically adjusts the flow rate as the membrane begins to foul. This allows additional product to pass through the filter and is shown graphically in Figure 1.

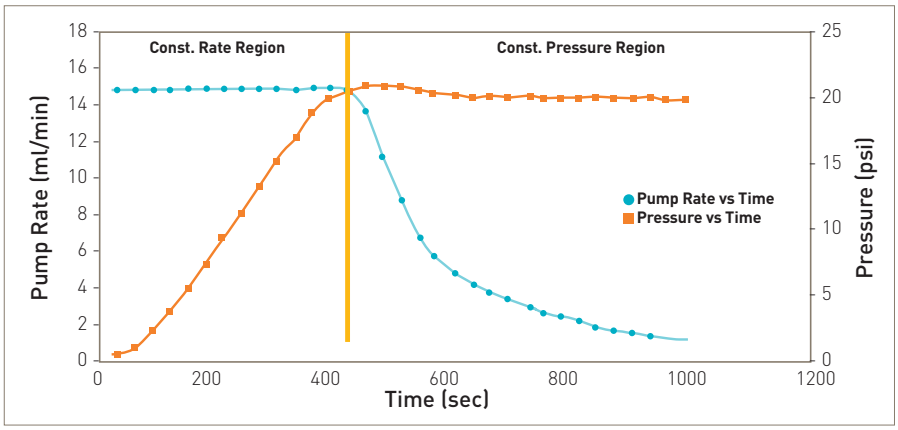

Figure 1 - Dead-end filtration by R/P Stat Method

Specifications

HarvestClear® Filtration System Components

The complete HarvestClear® Filtration System solution consists of a programmable fluid handling system and a single-use filtration manifold. The system and manifolds are ordered separately.

HarvestClear™ Fluid Handling System

- FilterTec™ controller with a 600RPM motor and 1081 pump head
- SciPres® pressure sensor monitor
- Communication cables
- SciDoc data acquisition software

Filter Manifold Components

- 1 x PROCLEAR GF 5 µm glass-fibre prefilter
- 1 x PROPOR HC 0.2 µm polyethersulphone high capacity sterilizing-grade membrane filter
- 2 x SciPres® pre-calibrated pressure sensors (1¨ Tri-Clover)
- 1 x set of platinum-cured #17 silicone tubing ($^1/_4$¨ I.D, $^3/_8$¨ O.D.)
- Luer connectors at each end, with sealing cups; bagged and zip-tied

FilterTec™ Specifications

- Dimension / Weight:
  Width: 5.75¨ (146 mm)
  Height: 8.5¨ (2126 mm)
  Depth: 11¨ (279 mm): 14 lbs (6.4 Kg)
- Enclosure & Rating:
  16 Ga, aluminium baked epoxy blue 4-40dC, 0-100% Humidity
- Pressure Sensors:
  Accommodates up to three (3) disposable pressure sensors. The calibrated pressure range is 0 - 60 psi. Any point within this range can be recalibrated using an external pressure reference source.
- Power:
  115 / 220-240 VAC, 60 / 50 Hz, 75 Watts, double fused: T1AL 250V (CE: IR35A 250VAC)
- Motor / Encoder:
  600 RPM, 30 VDC, 3.8A, 100 ppr
- I/O Ports:
  Male DB9 scale connections (RS-232), female DB9 printer or PC connection (RS-232), external IO DB37 connector, 1 TTL input, 4 TTL output, 3 4-20mA
- Operational Mode:
  Constant rate, constant pressure, R/P Stat and manual mode
- Pump Head:
  1081 flow rate (ml/min): 0.03 – 1515
  Pressure: 25 psi continuous, 45 psi max.

Accessories

- Single-use bioprocess containers
- WeighStation™

Ordering Information

HarvestClear® Fluid Handling System

975-30 [ ] - 0

Code	Electricity Output
0	120 VAC
1	220 VAC

HarvestClear® Filtration System Manifolds

975-300-0 - [ ]

Code	Volume	Prefilter	Sterilizing Filter
CH2	1 - 5L	10¨ 5µm PROCLEAR GF	10¨ 0.2µm PROPOR HC
CH10	5 -10L	20¨ 5µm PROCLEAR GF	10¨ 0.2µm PROPOR HC
CH20	10 -20L	30¨ 5µm PROCLEAR GF	10¨ 0.2µm PROPOR HC

Please contact your local Parker domnick hunter representative to discuss alternative configurations for your system.

Parker domnick hunter has a continuous policy of product development and although the Company reserves the right to change specifications, it attempts to keep customers informed of any alterations. This publication is for general information only and customers are requested to contact our Process Filtration Sales Department for detailed information and advice on a products suitability for specific applications. All products are sold subject to the company's Standard conditions of sale.

Europe: +44 (0)191 4105121 dhprocess@parker.com - North America: +1 608 824 0500 dhpsales.na@parker.com www.parker.com/dhsingleuse

ENERGOEKONOM spol. s r.o., Wolkerova 433, CZ-250 82 Úvaly, Czech Republic, Tel.: +420 281 981 055, info@energoekonom.cz, www.energoekonom.cz

SciLog® ChemTec™

- intelligent bioprocessing system
- metering system

Parker domnick hunter

The SciLog® ChemTec™ is a high precision metering system that provides application specific automation for chemical and biological application.

The precision metering is achieved by using high resolution optical motor encoders for volumetric applications as well as connection to a balance for gravimetric applications. Applications range from programmable dispensing strategies, reactor biomass and pH maintenance, analog control, as well as solution weight maintenance or diafiltration control.

The automatic documentation and alarm / pump stop settings allow the user to focus on other tasks while the system is running. Programmable end points ensure the system ceases operation when run stops command or application target endpoints are reached. The ChemTec™ is available with peristaltic, piston and magnetic gear models. When sold with SciDoc software or a printer, documentation capabilities include 10 real-time filtration parameters.

Features and Benefits

- Volumetric or gravimetric operation
- Compatible with most 3rd party balances
- Real-time data collection
- Dispense accuracy <0.5% error
- Intuitive application interface
- Safe, walk-away systems operation

Note: SciLog® & ChemTec™ are trademarks of Parker Hannifin Corporation.

Applications

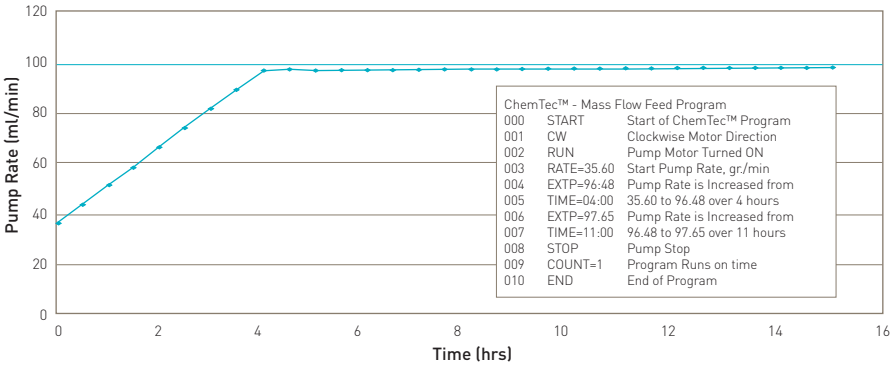

Pump Rate (ml/min) vs. Time (hours)

Metering

The ChemTec™ provides user-definable feed either by volume or by weight. Volumes are calculated by a high resolution optical encoder or if connected to an electronic scale, the ChemTec™ becomes a self-calibrating metering system. The feed rates are executed on a user-programmable time schedule.

Linear and exponential feed gradients are readily implemented from the ChemTec™ front panel or programs can be prepared, stored and transferred from a PC.

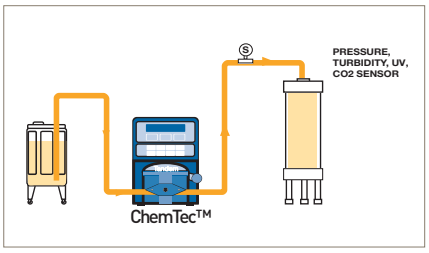

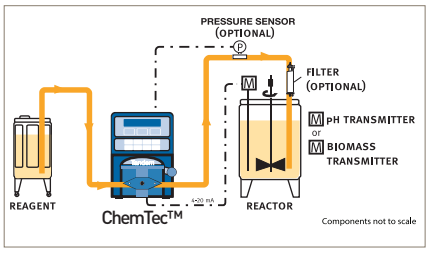

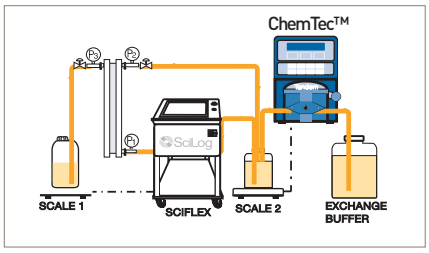

Analog Monitoring Mode
The ChemTec™ accepts signals from controllers or sensors such as turbidity or UV monitors. These transmitters provide a 4-20mA signal that is proportional to the parameters the sensor is monitoring. In the Analog mode, the ChemTec™ 0-100% pump output is directly proportional to the signal received from the 4-20mA device.

pH Control
The ChemTec™ automates pH control as well as titrations in larger-volume reactor applications. In the pH control mode, the ChemTec™ is connected to a pH transmitter with a 4-20mA output. The ChemTec™ provides user-definable pH set-point, which it will maintain by adding small increments of reagent. The pH set-point can be maintained indefinitely within 0.10 pH unit, i.e. the smallest selectable pH bandwidth. For titration applications, the user-definable pH set-point represents the titration endpoint, e.g. pH set-point = pH 7.00 for a simple acid / base neutralization reaction.

Diafiltration or Weight Maintenance
The ChemTec™ can monitor and maintain the weight of a solution stored on a balance. An example would be when performing a tangential flow filtration process, a common step involves diafiltration ("washing") of protein solutions. The ChemTec™ is programmed to maintain a constant weight by automatically adding buffer to the filtration reservoir to make up for the volume removed during filtration. The ChemTec™ adds exchange buffer until a user-defined volume limit has been attained. The ChemTec™ also allows stop/start control over the diafiltration system.

Specifications

	Description
Dimension / Weight	Width: 5.75" (146 mm) x height: 8.5" (2126 mm) x depth: 11" (279 mm): 14 lbs (6.4 Kg)
Enclosure & Rating	16 Ga, aluminium baked epoxy blue 4-40dC, 0-100% humidity, IP20
Pressure Sensors	Accommodates up to three (3) disposable pressure sensors. The calibrated pressure range is 0 - 60 psi. Any point within this range can be recalibrated using an external pressure reference source.
Power	115 / 220-240 VAC, 60 / 50 Hz, 75 Watts, double fused: T1AL 250V (CE: IR35A 250VAC)
Motor / Encoder	8, 160, 600, 3400 RPM, 30 VDC, 3.8A, 120 ppr 8 and 160 RPM, 100 ppr 600, 3400 RPM
I/O Ports	Male DB9 Scale Connections (RS-232), female DB9 printer or PC connection (RS-232), external IO DB37 connector, 1 TTL input, 4 TTL output, 3 4-20mA
Operational Mode	Mass flow, volume flow, diafiltration, pH and manual mode

Options and Accessories

Pump Heads:

Tandem Peristaltic
- 1081 Flow Rate (ml/min): 0.03 - 1515
- 1082 Flow Rate (ml/min): 0.5 - 2258
  (Pressure: 25 psi continuous - 45 psi max)

- FMI RH Piston - Flow Rate (ml/min):
  0.002-320 (600, 3400 RPM)
  (Pressure: 100 psi max)
- Micropump MAG - Flow Rate (ml/min):
  0.54-3488 (3400 RPM)
  (Pressure: 40 - 70 psi max model dependant)

- Masterflex Peristaltic - Flow Rate (ml/min):
  0.03- 2900 (8, 160. 600 RPM)
  (Pressure: 25 psi continuous - 45 psi max)

Ordering Information

20 [ ] - CHEM - 1 [ ] [ ]

Code	Electricity Input
0	120 VAC
1	220/240 VAC

Code	Motor
0	8 RPM
1	160 RPM
3	3400 RPM
6	600 RPM

Pump Head

Code	SciLog
81	1081 Pump
82	1082 Pump

Code	Masterflex
21	Thin Wall - Variable Occlusion
22	Thick Wall - Variable Occlusion
23	Thin Wall - Fixed Occlusion
24	Thick Wall - Fixed Occlusion
25	High Performance

Code	Micro Pump
31	MAG 120
32	MAG 184
33	MAG 1840
34	MAG 040
35	MAG 200
36	MAG 201
37	MAG 187

Code	FMI RH
41	OCKC
41T	OCTC
42	1CKC
42T	1CTC
43	OCKC-LF
43T	OCTC-LF
46	1CKC-LF
46T	1CTC-LF
47	OSKY-LF
47T	OSTY-LF
472	OCKC-LF
46T	1CTC-LF

Example: 200-CHEM-1182 - SciLog® ChemTec™ - 120 VAC with scale, 160 RPM motor and 1082 head

Parker domnick hunter has a continuous policy of product development and although the Company reserves the right to change specifications, it attempts to keep customers informed of any alterations. This publication is for general information only and customers are requested to contact our Process Filtration Sales Department for detailed information and advice on a products suitability for specific applications. All products are sold subject to the company's Standard conditions of sale.

Europe: +44 (0)191 4105121 dhprocess@parker.com - North America: +1 608 824 0500 dhpsales.na@parker.com www.parker.com/dhsingleuse

ENERGOEKONOM spol. s r.o., Wolkerova 433, CZ-250 82 Úvaly, Czech Republic, Tel.: +420 281 981 055, info@energoekonom.cz, www.energoekonom.cz

SciLog® FilterTec™ / FilterTec™ Plus

- intelligent bioprocessing system
- dead-end single / multi-filtration system

Parker domnick hunter

The SciLog® FilterTec™ is an automated laboratory scale normal flow filtration (NFF) system that monitors, adjusts and documents filter back pressure and filtrate.

The result is a system that can optimize filtration parameters, maximize filter throughput and can also be used as a tool to evaluate / compare different filters by calculating Vmax. The system also offers the patented R/P Stat (rate / pressure) method, which has been proven to increase filter throughput up to 30%.

The automatic documentation and alarm / pump stop settings allow the user to focus on other tasks while the system is running. Programmable end points ensure the system stops operating when a given back pressure, filtrate rate or total filtrate limit has been reached. When sold with SciDoc software, documentation capabilities include collection of 15 real-time filtration parameters. The FilterTec™ is also an integral component in the HarvestClear® Filtration System, a complete solution for clarifying bioreactor outputs up to 20L.

Features and Benefits

- Safe, walk-away system operation
- Filterability studies and Vmax determination
- Real-time data collection of 15 filtration parameters
- Increased NFF filter efficiency up to 30%
- 3 pressures sensor connections for serial or parallel filter trains
- Compatible with all filters
- Optional scale enables gravimetric control

Note: SciLog®, HarvestClear® & FilterTec™ are trademarks of Parker Hannifin Corporation.

FilterTec™ Plus

Triple your NFF productivity with the FilterTec™ Plus and enjoy the same features of the SciLog FilterTec™ for filterability studies, filter size determination and filter scale-up. The FilterTec™ Plus has expanded upon the capabilities of the FilterTec™ to communicate with up to three electronic balances and control three pump heads simultaneously. This product allows for testing of three identical NFF filters at the same rates or three different filters at the same pressure. Parallel processing of a solution through three filters provides statistical verification of filter capacity. The FilterTec™ Plus is compatible with all manufacturers' filters.

Applications

Normal Flow Filtration (NFF)

The FilterTec™ uses a pressure sensor and scale feedback to perform normal flow operations by constant rate or constant pressure. The end point controls ensure the system shuts off when a user defined maximum filter pressure, minimum filtrate rate or maximum filtrate limit is reached.

Normal Flow Filtration (NFF) - Optimized

The FilterTec™ achieves optimized normal flow operations by utilizing the patented R/P Stat Method. This automated procedure maintains a selected pump rate until a user-defined upper pressure limit has been attained as a result of filter plugging. The system automatically switches from a constant rate to a constant pressure fluid delivery (see Fig. 1). The pump continuously reduces the flow rate to maintain the pressure across the filter until a user-defined minimum filtrate rate is attained. This method allows full utilization of the existing filter capacity and is accompanied by a significant increase in total filter throughput upwards of 30% compared to constant pressure or constant flow throughput data.

Filterability Studies

The FilterTec™ is capable of simultaneously monitoring three pressure points. This capability is particularly useful in monitoring the pressure differentials of multiple filters in a serial or a parallel filter train. Excessive pressure build-up across a filtration stage element typically indicates the need for a larger porosity and/or a larger area filter element. The FilterTec™'s R/P programmable mode allows you to modify the pump rate and/or pressure over a selected time interval, in a stair-step (Step) or ramped (Scan) manner, (see Fig. 2) until the user defined filtrate weight has been attained.

Vmax Determination

When used with an electronic scale, the FilterTec™ collects and documents the filtrate weight in the constant pressure, constant rate or R/P Stat Method. The parameter T / W (Time / Filtrate Weight) is plotted against time. The inverse of the resulting slope represents Vmax. The FilterTec™ reports the instantaneous Vmax from the slope of the neighboring data points. (see Fig. 3).

Performance Characteristics

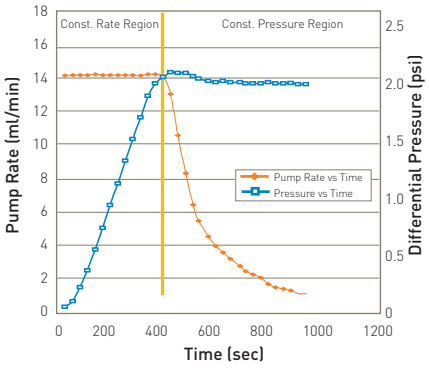

Cellulose Acetate Membrane Filter
Porosity: 0.45 micron, Filter Area: 17.3 cm²
Solution: Fat Free Skim Milk, 20 x Diluted

Fig. 1 - Normal Flow Filtration by R/P Stat Method

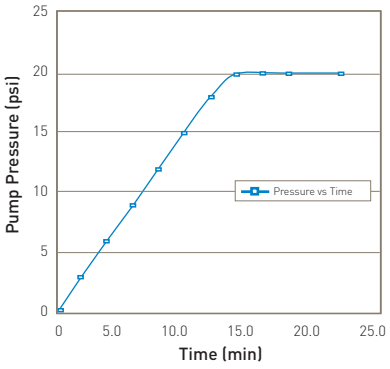

Fig. 2 - FilterTec™ R/P Programmable Mode Time-Programmable Pump Pressure

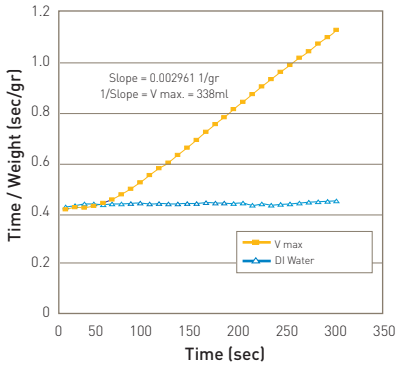

Cellulose Actate Membrane Discs, 47 mm
Porsity: 0.45 micron Surrogate Sample; 30 x Skim Milk,
Pump: #14 Silicone Tubing, FilterTec™ 'P-State Mode', 20 psi

Fig. 3 - V max: NFF Capacity Determination

Specifications

	Description
Dimension / Weight	Width: 5.75¨ (146 mm) x Height: 8.5¨ (2126 mm) x Depth: 11¨ (279 mm): 14 lbs (6.4 Kg)
Enclosure & Rating	16 Ga, aluminium baked epoxy blue 4-40dC, 0-100% humidity
Pressure Sensors	Accommodates up to three disposable pressure sensors. The calibrated pressure range is 0 - 60 psi. Any point within this range can be recalibrated using an external pressure reference source.
Power	115 / 220-240 VAC, 60 / 50 Hz, 75 Watts, double fused: T1AL 250V (CE: IR35A 250VAC)
Motor / Encoder	8, 160, 600 RPM, 30 VDC, 3.8A, 120 ppr 8 and 160 RPM, 100 ppr 600 RPM
I/O Ports	Male DB9 scale connections (RS-232), female DB9 printer or PC connection (RS-232), external IO DB37 connector, 1 TTL input, 4 TTL output, 3 4-20mA
Operational Mode	Constant rate (can be used to perform R/P Stat Method), constant pressure, R/P programmable and manual mode

Options and Accessories

FilterTec™ Pump Heads: SciLog® Tandem

- Pressure: 25 psi continuous, 45 psi max.
- 1081 Flow Rate (ml/min): 0.03 - 1515
- 1082 Flow Rate (ml/min): 0.5 - 2258

FilterTec™ Plus Pump Heads: MasterFlex Easyload II

- 3 heads (thin walled tubing) with 8 RPM motor. Flow rate*: 0.03 to 24 ml/min.
- 3 heads (thin walled tubing) with 160 RPM motor. Flow rate*: 0.5 to 554 ml/min.
- 3 heads (thin walled tubing) with 600 RPM motor. Flow rate*: 2 to 1515 ml/min.
- 3 heads (thick walled tubing) with 600 RPM motor. Flow rate*: 59 to 2258 ml/min.

Electronic Scales

- 8 RPM System: 2100g capacity x 0.01g resolution
- 160 or 600 RPM System: 8200g capacity x 0.1g resolution

Ordering Information

FilterTec™

20 [ ] - FLTR - [ ] [ ] [ ]

Code	Electricity Input
0	120 VAC
1	220 VAC

Code	Scale
5	None
7	Scale Included

Code	Motor
0	8 RPM
1	160 RPM
6	600 RPM

Code	Pump Head
81	1081 Pump
82	1082 Pump

Example: 200-FLTR-7181 - SciLog® FilterTec™ - 120 VAC with scale, 160 RPM motor and 1081 head

FilterTec™ Plus

20 [ ] - FLTR - [ ] [ ] [ ]

Code	Electricity Input
0	120 VAC
1	220 VAC

Code	Scale
6	None
8	Scale Included

Code	Motor
0	8 RPM
1	160 RPM
6	600 RPM

Code	Pump Head
21	Easyload II, thin walled tubing
22	Easyload II, thick walled tubing

Example: 200-FLTR-8121- SciLog® FilterTec™ Plus - 120 VAC with scale, 160 RPM motor and 3 MasterFlex Easyload II heads for thin walled tubing.

Europe: +44 (0)191 4105121 dhprocess@parker.com - North America: +1 608 824 0500 dhpsales.na@parker.com www.parker.com/dhsingleuse

Parker domnick hunter has a continuous policy of product development and although the Company reserves the right to change specifications, it attempts to keep customers informed of any alterations. This publication is for general information only and customers are requested to contact our Process Filtration Sales Department for detailed information and advice on a products suitability for specific applications. All products are sold subject to the company's Standard conditions of sale.

ENERGOEKONOM spol. s r.o., Wolkerova 433, CZ-250 82 Úvaly, Czech Republic, Tel.: +420 281 981 055, info@energoekonom.cz, www.energoekonom.cz

SciLog® LabTec™

- intelligent bioprocessing system
- dispensing system

Parker domnick hunter

The SciLog® LabTec™ is an automated laboratory scale dispensing system by volume, weight or weight ratio.

The LabTec™ automates, optimizes and documents repetitive liquid dispensing with or without in-line filter sterilization. The LabTec™ models are ideally suited for dispensing sterile solutions in media kitchens and microbiology laboratories. Also widely used in small production runs to fill your final product into vials, bottles, bags, and containers.

The automatic documentation and alarm / pump stop settings allow the user to focus on other tasks while the system is running. Remote control and programmable end points ensure the system starts and stops operating when a given dispense is complete or an interlock condition occurs. When sold with SciDoc software or a printer, documentation capabilities include 7 real-time parameters.

Features and Benefits

- Rapid, high prevision dispensing by volume, weight or weight ratio
- Self priming
- Reversible flow
- Remote activation
- Accuracy +/- 0.5% by volume
- Accuracy +/- 0.3% by weight
- Pressure alarm alerts when in-line filter needs to be replaced
- PC or printer documentation of dispensing

Note: SciLog® & LabTec™ are registered trademarks of Parker Hannifin Corporation.

Performance Characteristics

Table 1 - Automated Weighing and Dilution of Food Samples

Trial	Sample Weight (g)	Theoretical Diluent Weight (g)	Actual Diluent Weight (g)	Errors (g)
1	10.0	90.0	90.0	0.0
2	10.0	90.0	89.9	-0.1
3	10.0	90.0	90.1	+0.1
4	10.0	90.0	89.8	-0.2
5	10.0	90.0	90.1	+0.1
6	10.0	90.0	90.0	+0.1
7	10.0	90.0	89.9	-0.1
8	10.0	90.0	90.2	+0.2
9	10.0	90.0	90.1	+0.1
10	10.0	90.0	89.8	-0.2

Table 2 - High Speed Volumetric Dispensing

Dispensed Volume (ml)	Tubing Size	Pump Speed (%)	Slow Factor (ml)	Typical Precision (%)	Dispensing Time / Aliquot (sec)
5.0	#15	100%	2.50	1.7%	2.1
10.0	#15	100%	2.50	0.5%	2.0
25.0	#15	100%	2.50	0.20%	2.7
25.0	#24	100%	4.75	0.15%	2.9
50.0	#24	100%	4.75	0.50%	3.9
100.0	#24	100%	4.75	0.35%	6.3
100.0	#35	100%	5.00	<0.5%	4.5
200.0	#35	100%	5.00	<0.5%	6.0
300.0	#35	100%	5.00	<0.5%	12.0

Table 3 - Gravimetric Solution Dispensing

Weight Entered (g)	Averge Dispensed Weight (g)	RSD (%)	Dispensing Time per Aliquot (sec)
200.00	199.95	0.03%	16
150.00	150.01	0.11%	14
100.00	100.01	0.11%	13
50.00	49.96	0.18%	12
25.00	25.05	0.25%	10

Applications

Weighing, Dilution and Sterilization

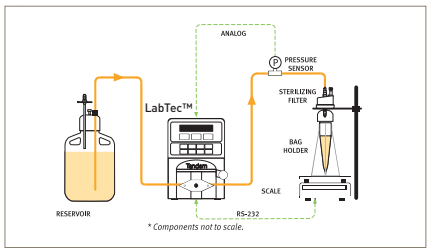

The LabTec™ significantly increases the productivity of any microbiology laboratory. The dispensing system automates weighing and diluting of food samples, in preparation for bacteriological analysis. Only an approximate sample size is needed. The LabTec™ dispenser calculates and rapidly dispenses the media required to achieve a user-selected diluent factor. See Table 1. Costly and time-consuming autoclaving of media is avoided with in-line filter sterilization of diluents using a filter capsule. A disposable pressure sensor monitors filter backpressure and provides an alarm signal when a failing sterilizing filter (high backpressure) needs to be replaced. An optional printer or PC hook-up automatically documents all sample and diluent weights. The LabTec™ dispenser improves the speed, precision and accuracy of the entire sample preparation process by automating the weighing, dilution and documentation process.

Precision Batch Dispensing

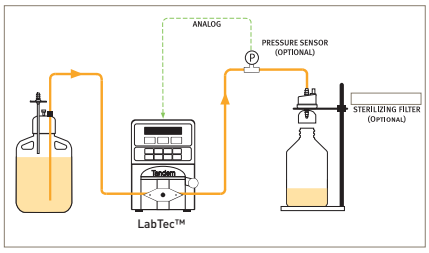

The LabTec™ Smart Dispensing System is capable of high speed, high precision batch dispensing. The LabTec™ comes with a 1082 Tandem peristaltic pump head. Up to 10 different dispensing volumes can be stored and easily retrieved for quick batch volume dispensing. An optional sterilizing filter and disposable pressure sensor provide for in-line buffer sterilization and reliable detection of filter plug-up conditions. Typical performance results including dispensing times are summarized in Table 2. The LabTec™ is easy to calibrate. A stored calibration curve is provided for each pump head/pump tubing combination. From a stored menu, you select the pump tubing you have installed in the LabTec™. For high accuracy dispensing applications, you may want to use the LabTec™'s single-point re-cal feature.

Fast, Accurate Dispensing and Sterilization

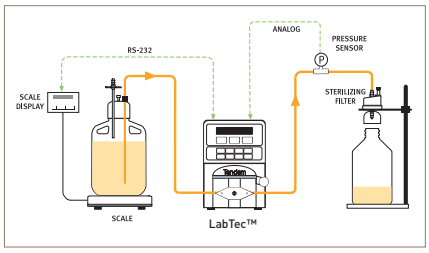

In this configuration, the LabTec™ is connected to an electronic scale for high accuracy filling applications. A sterilizing filter and a disposable pressure transducer provide a safe and effective in-line filter sterilization capability. The LabTec™ continuously monitors the filter backpressure and alarms when a user-defined pressure level has been exceeded, which indicates a filter plug-up condition. See Table 3. The high dispensing accuracy is achieved by reducing the pump rate as final target weight is being approached. The slow-down avoids overshooting the target weight. After slow-down, the LabTec™ pump stops briefly when 99% of the final target weight has been dispensed. The electronic scale is allowed to come to a steady-state readout and the LabTec™ slowly starts up again to dispense the remaining solution.

Specifications

	Description
Dimension / Weight	Width: 5.75¨ (146 mm) x height: 8.5¨ (2126 mm) x depth: 11¨ (279 mm): 14 lbs (6.4 kg)
Enclosure & Rating	16 Ga, aluminium baked epoxy blue 4-40dC, 0-100% humidity, IP20
Pressure Sensors	Accommodates one disposable pressure sensor. The calibrated pressure range is 0 - 60 psi. Any point within this range can be recalibrated using an external pressure reference source.
Power	115 / 220-240 VAC, 60 / 50 Hz, 75 Watts, double fused: T1AL 250V (CE: IR35A 250VAC)
Motor / Encoder	8, 160, 600, 3400 RPM, 30 VDC, 3.8A, 100 ppr
I/O Ports	Male DB9 scale connections (RS-232), female DB9 printer or PC connection (RS-232), external IO DB37 connector, 1 TTL input, 4 TTL output, 3 4-20mA
Operational Mode	Dispense by volume, weight or weight ratio. Store up to 10 programs per mode. Pump re-calibration.

Options and Accessories

Pump Heads:

Tandem Peristaltic

- 1081 flow rate (ml/min): 0.03 - 1515
- 1082 flow rate (ml/min): 0.5 - 2258
  (Pressure: 25 psi continuous - 45 psi max)
- FMI RH piston: 0.002-320 (600, 3400 RPM)
  (Pressure: 100 psi max)
- Micropump MAG: 0.54-3488 (3400 RPM)
  (Pressure: 40 - 70 psi max[model dependant])
- Masterflex peristaltic:
  0.03- 2900 (8, 160. 600 RPM)
  (Pressure: 25 psi continuous - 45 psi max)

Ordering Information

20 [ ] - LABT-1 [ ] [ ]

Code	Electricity Input
0	120 VAC
1	220 VAC

Code	Motor
0	8 RPM
1	160 RPM
3	3400 RPM
6	600 RPM

Pump Head

Code	SciLog
81	1081 Pump
82	1082 Pump

Code	Masterflex
21	Thin Wall
22	Thick Wall
62	Hi Performance L/S

Code	Micro Pump	Code	Micro Pump
31	MAG 120	35	MAG 200
32	MAG 201	36	MAG 201
33	MAG 1840	37	MAG 187
34	MAG 040		

Code	FMI RH
41	OCKC
42	1CKC

Example: 200-LABT-1181 - SciLog® LabTec™ - 120 VAC, 160 RPM motor and 1081 head

Parker domnick hunter has a continuous policy of product development and although the Company reserves the right to change specifications, it attempts to keep customers informed of any alterations. This publication is for general information only and customers are requested to contact our Process Filtration Sales Department for detailed information and advice on a products suitability for specific applications. All products are sold subject to the company's Standard conditions of sale.

Europe: +44 (0)191 4105121 dhprocess@parker.com - North America: +1 608 824 0500 dhpsales.na@parker.com www.parker.com/dhsingleuse

ENERGOEKONOM spol. s r.o., Wolkerova 433, CZ-250 82 Úvaly, Czech Republic, Tel.: +420 281 981 055, info@energoekonom.cz, www.energoekonom.cz

SciLog® MabTec®

- intelligent bioprocessing system
- automated high density cell culture system

Parker | domnick hunter

The SciLog® MabTec® is an automated high density cell culture system.

The MabTec® high density cell culture system is a fully automated gravimetric bioreactor maintenance system. Its capabilities include automated feed, harvest or recirculation in fully disposable or hybrid bioreactor flow paths. The system also includes the ability to conduct unattended bioreactor inoculations, bolus feed and/or pump flow reversals (to prevent filter fouling) all on one unit with run times from hours to months.

The MabTec® is available with a choice of pump heads and can feed bioreactor sizes from 50mL to 2000L. The MabTec® is engineered to fit seamlessly with any bioreactor and enhance its performance. A laboratory scale, available separately, must be connected to use the MabTec®'s gravimetric features.

Features and Benefits

- Safe, walk-away system operation
- Maintains a steady state bioreactor weight / volume within +/- 0.5%
- Real-time data collection with optimization tools
- Small, lightweight and mobile
- Works with any bioreactor
- Eliminates bioreactor addition errors
- Reduces aggregation of cells in the perfusion filter
- Intuitive application interface

Note: SciLog® & MabTec® are registered trademarks of Parker Hannifin Corporation.

MabTec® motor size, pump head and tubing recommendations vs reactor size and reactor exchanges per day

#Exchange per day	Reactor Volume Size																					
	0.05	0.25	0.5	1	1.5	2	2	2.2	3	3	4	4	5	5	10	20	50	100	250	500	1000	2000
1	0.03	0.17	0.35	0.69	1.04	1		2	2		3		3		7	14	35	69	174	347	694	1389
2	0.07	0.35	0.69	1	2	3		3	4		6	6	7		14	28	69	139	347	694	1389	
3	0.10	0.52	1	2	3	4	4	5	6		8	8	10	10	21	42	104	208	521	1042	2083	
4	0.14	0.69	1	3	4	6	6	6	8	8	11	11	14	14	28	56	139	278	694	1389		
5	0.17	0.87	2	3	5	7	7	8	10	10	14	14	17	17	35	69	174	347	868	1736		
10	0.35	2	3	7	10	14	14	15	21	21	28	28	21	35	69	139	347	694	1736			
15	0.52	3	5	10	16	21	21	23	31	31		42		52	104	208	521	1042				
20	0.69	3	7	14	21		28	31		63		56		69	139	278	694	1389				
	#13	#15		#24			#16	#14		#15	#14	#16	#24	#15		#24	#15	#24	#35			
	8 RPM						160 RPM						8	160 RPM			600 RPM					
	1081	1082					1081			1082	1081		1082									

*Flow rates in grams per minute

- 8 RPM with 1081 and #13 tubing
- 8 RPM with 1082 and #15 tubing
- 8 RPM with 1082 and #24 tubing
- 160 RPM with 1081 and #14 tubing
- 160 RPM with 1081 and #16 tubing
- 160 RPM with 1082 and #15 tubing
- 160 RPM with 1082 and #24 tubing
- 600 RPM with 1082 and #15 tubing
- 600 RPM with 1082 and #24 tubing
- 600 RPM with 1082 and #35 tubing

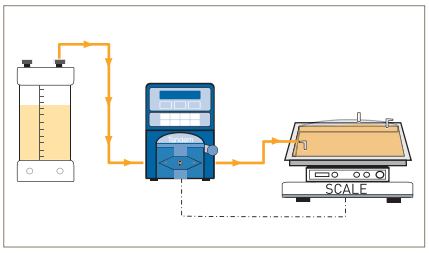

Fig. 1 Pre-Programmed Modes
The MabTec® has a pre-programmed mode for inoculating, transfecting and induction when used with a laboratory scale.
This pre-programmed mode allows the user to deliver precise additions without being physically present, which is ideal for processes that are scheduled to run at inconvenient hours or on a repeated schedule.

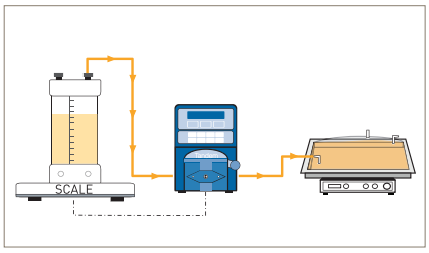

Fig.2 - Fed Batch
The MabTec® can be used to automate the feeding of cell cultures. Automation of this process greatly reduces the possibility of human error while reducing operator time.
The MabTec® can be programmed to deliver a continuous feed for a specified number of days up to 100. Two modes exist for feeding; one that monitors levels in the reactor and makes additions while the other monitors the reactor and amount of feed media.

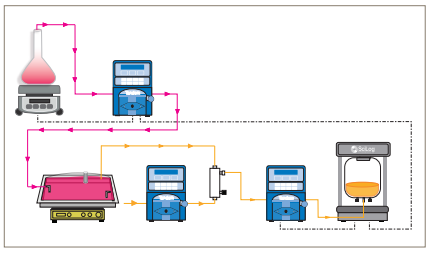

Fig. 3 - Ultra High Density Cell Culture
The MabTec® system is uniquely designed to provide a complete perfusion strategy.
The user is able to maintain fresh media in the reactor, remove the desired component or prevent the build-up of waste products, all without a scale under the bioreactor.
By keeping bioreactor weight maintained to within 2% and providing a constant stream of nutrient rich and pH buffered media, the bioreactor environment becomes ideal for ultra high density cell cultures.

Specifications

	Description
Dimension / Weight	Width: 5.75¨ (146 mm) x height: 8.5¨ (2126 mm) x depth: 11¨ (279 mm): 14 lbs (6.4 Kg)
Enclosure & Rating	16 Ga, aluminium baked epoxy blue 4-40dC, 0-100% humidity, IP20
Pressure Sensors	Accommodates three disposable pressure sensors [included]. The calibrated pressure range is 0 - 60 psi. Any point within this range can be recalibrated using an external pressure reference source.
Power	115 / 220-240 VAC, 60 / 50 Hz, 75 Watts, double fused: T1AL 250V (CE: IR35A 250VAC)
Motor / Encoder	8, 160, 600 RPM, 30 VDC, 3.8A, 120 ppr 8 and 160 RPM, 600 RPM 100 ppr
I/O Ports	Male DB9 scale connections, female DB9 printer or PC vonnection, external IO DB37 connector 4 TTL input, 3 4-20mA analog input: constant rate / constant pressure filtration with size user-definable alarms
Operational Mode	Exact Feed: 2 scales, perfusion, re-circulation, feed: 2 scale, feed: 1 scale, seed induction, manual

Options and Accessories

Pump Heads:

- Pressure: 25 psi continuous
  45 psi max.
- 1081 Flow Rate (ml/min): 0.03 - 1515
- 1082 Flow Rate (ml/min): 0.5 - 2258

Accessories:

- SciPres® Pressure sensors
- Fittings and tubing kit
- Manifolds
- Printer
- Master slave cables
- Laboratory balance
- WeighStation™

Ordering Information

20 [ ] - MTEC - 1 [ ] [ ]

Code	Electricity Input
0	120 VAC
1	220 VAC

Code	Motor
0	8 RPM
1	160 RPM
6	600 RPM

Code	Pump Head
81	1081 Pump
82	1082 Pump

Example: 200-MTEC- 1181- SciLog® MabTec® - 120 VAC with scale, 160 RPM motor and 1081 head

Parker domnick hunter has a continuous policy of product development and although the Company reserves the right to change specifications, it attempts to keep customers informed of any alterations. This publication is for general information only and customers are requested to contact our Process Filtration Sales Department for detailed information and advice on a products suitability for specific applications. All products are sold subject to the company's Standard conditions of sale.

Europe: +44 (0)191 4105121 dhprocess@parker.com - North America: +1 608 824 0500 dhpsales.na@parker.com www.parker.com/dhsingleuse

ENERGOEKONOM spol. s r.o., Wolkerova 433, CZ-250 82 Úvaly, Czech Republic, Tel.: +420 281 981 055, info@energoekonom.cz, www.energoekonom.cz

SciLog® PureTec®

- intelligent bioprocessing system
- tangential flow filtration system

Parker domnick hunter

The SciLog® PureTec® is a laboratory-scale tangential flow filtration (TFF) and parameter development system.

The PureTec® system is delivered as a complete development system including three pressure sensors, an 8.1kg balance, a 500mL vessel with magnetic stirrer and startup kit including tubing and fittings. Methods can be performed using constant or step cross flow, inlet or transmembrane pressure (TMP).

The automatic documentation and alarm / pump stop settings allow the user to focus on other tasks while the system is running. Programmable end points ensure the system stops operating when a user defined concentration or diafiltration is reached. When sold with SciDoc software or a printer, documentation capabilities include 17 real-time filtration parameters such as TMP, permeate flow rate and quantity, Normalized Water Permeability (NWP), concentration factor, and other parameters over time.

Note: SciLog® & PureTec® are registered trademarks of Parker Hannifin Corporation.

Features and Benefits

- Complete development system
- Real-time data collection with optimization tools
- Scalable parameters, easy tech transfer
- Flow and automated pressure control
- Safe, walk away system operation
- Intuitive application interface

Performance Characteristics

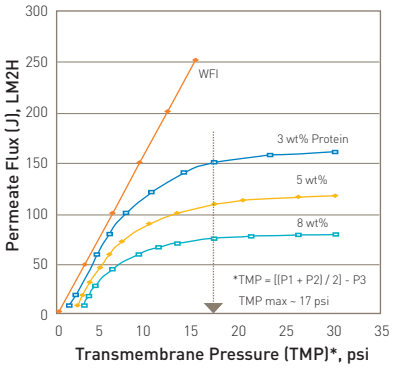

Fig. 1 - Transmembrane Pressure vs. Permeate Flux

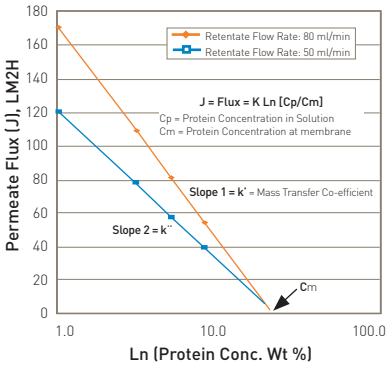

Fig. 2 - Ln [Protein Conc, (CP)] vs. Permeate Flux (J)

In TFF, concentration procedures, a dilute protein solution (~1.0 g/L) is re-circulated, through a TFF filter whose selected porosity allows only solvent (water) and dissolved salt to pass through the filter pores and is collected as permeate. The removal of water leaves an increasingly concentrated protein solution behind as retentate. The gradual removal of water causes a gradual increase in solution viscosity during the TFF concentration step. Permeate flux, transmembrane pressure (TMP) and cross flow rate are significantly affected by solution viscosity changes.

In order to maintain an optimal permeate flux, both cross flow rate and measured TMP require frequent, manual adjustment during the TFF concentration procedure. The PureTec® has the control methods to perform the operation automatically via constant or stepped cross flow rate, inlet pressure or transmembrane pressure. The system will automatically stop when the user defined concentration factor has been reached.

Applications

Concentration

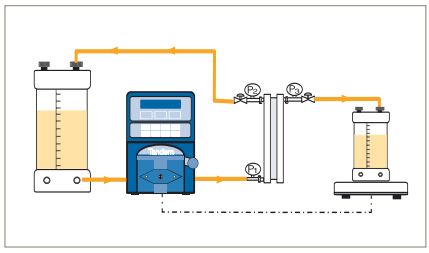

In the constant pump rate or pressure modes, you can implement your selected pump rate or pressures and use some or all of five alarm conditions. The pump rate or pressures can be increased or decreased "on-the-fly" without stopping the pump action.

In the constant rate mode, increasing the feed rate in a stepwise fashion and simultaneously monitoring the permeate collection rate allows you to readily determine the optimal feed rate with the highest permeate yield (See figure 2).

In the constant pressure mode, increasing the trans-membrane pressure (TMP) in a step-wise fashion and simultaneously monitoring the permeate collection rate allows you to determine the optimal TMP with the highest permeate yield (See figure 1).

Diafiltration via Suction

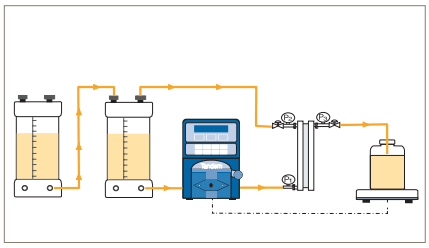

Diafiltration via ChemTec®

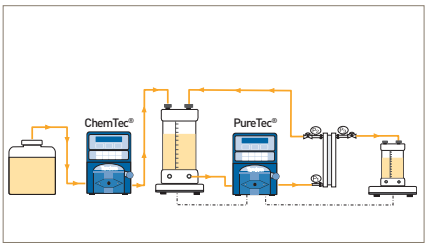

In diafiltration procedures, a protein solution is "washed", i.e. de-salted, using an exchange buffer to remove undesirable electrolyte (dissolved salt). The concentrated protein solution is re-circulated, through a TFF filter whose selected porosity allows only the undesirable electrolyte to pass through the filter pores, which is collected as permeate. The permeate volume (undesirable electrolyte) that has been removed from the concentrated protein solution (retentate) is replaced with an (desirable) exchange buffer. In constant volume diafiltration or "washing" procedure, the collected electrolyte is automatically replaced by an equal volume of exchange buffer. Approximately ten (10x) volume exchanges are typically required for substantial removal of undesirable electrolyte from the concentrated protein solution.

Diafiltration via suction:
For small volumes a SciLog® pressure vessel stored with buffer can be connected to the secondary inlet port on the retentate vessel. While keeping a closed system the retentate vessel will automatically draw out buffer to replace the salt and solvent that has been removed by the filter. The process will continue until the PureTec® has reached its programmable end points.

Diafiltration via ChemTec®:
For larger volumes the SciLog® ChemTec® system and an appropriately sized balance will monitor and maintain the fluid in the PureTec®'s retentate vessel. The ChemTec® will maintain the level until a user defined volume exchange has been reached.

Specifications

	Description
Dimension / Weight	Width: 5.75" (146 mm) x height: 8.5" (2126 mm) x depth: 11" (279 mm): 14 lbs (6.4 kg)
Enclosure & Rating	16 Ga, aluminium baked epoxy blue 4-40dC, 0-100% humidity, IP20
Pressure Sensors	Accommodates three disposable pressure sensors. The calibrated pressure range is 0 - 60 psi. Any point within this range can be recalibrated using an external pressure reference source.
Power	115 / 220-240 VAC, 60 / 50 Hz, 75 Watts, double fused: T1AL 250V (CE: IR35A 250VAC)
Motor / Encoder	8, 160, 600 30 VDC, 3.8A, 120 ppr 8 & 160 RPM, 100 ppr 600 RPM
I/O Ports	Male DB9 scale connections (RS-232), female DB9 printer or PC connection (RS-232), external IO DB37 connector, 1 TTL input, 4 TTL output, 3 4-20mA Analog Input: Constant rate / constant pressure filtration with size user-definable alarms
Operational Mode	Constant pump rate, constant inlet or transmembrane pressure (TMP)

Options and Accessories

Pump Heads: SciLog Tandem

- Pressure: 25 psi continuous, 45 psi max.
- 1081 flow rate (ml/min): 0.03 - 1515
- 1082 flow rate (ml/min): 0.5 - 2258

Accessories

- Ohaus balance 8200g, 0.1g resolution
- Vessel 500 mL
- Magnetic mixer
- Pressure sensors (3x)
- Fittings & tubing kit

Ordering Information

20 [ ] - PURE- [ ] [ ] [ ]

Code	Electricity Input
0	120 VAC
1	220 VAC

Code	Scale
7	Scale Included

Code	Motor
0	8 RPM
1	160 RPM
6	600 RPM

Code	Pump Head
	SciLog
81	1081 Pump
82	1082 Pump

Example: 200-PURE-7181 - SciLog® PureTec® - 120 VAC with scale, 160 RPM motor and 1081 head

Parker domnick hunter has a continuous policy of product development and although the Company reserves the right to change specifications, it attempts to keep customers informed of any alterations. This publication is for general information only and customers are requested to contact our Process Filtration Sales Department for detailed information and advice on a products suitability for specific applications. All products are sold subject to the company's Standard conditions of sale.

Europe: +44 (0)191 4105121 dhprocess@parker.com - North America: +1 608 824 0500 dhpsales.na@parker.com www.parker.com/dhsingleuse

ENERGOEKONOM spol. s r.o., Wolkerova 433, CZ-250 82 Úvaly, Czech Republic, Tel.: +420 281 981 055, info@energoekonom.cz, www.energoekonom.cz

SciLog® SciFlex® NFF

- intelligent bioprocessing system
- semi-automated NFF

The SciLog® SciFlex® NFF is a proven semi-automated single-use platform to use in discovery to production-scale normal flow applications.

The SciFlex® NFF automated single-use normal flow filtration (NFF) system automatically monitors, adjusts and documents pressures and flow rate to optimize processing times, and maximize filter life and efficiency. Using the onboard sensors and automation we eliminate the need for constant monitoring during production runs. The SciFlex® system's 'Open Architecture' design means there is no need to change existing filter or membrane types / manufacturers because this system will work with any supplier's filter.

Via a colour, touch screen and pre-installed operational software, users have the ability to execute a normal flow filtration process via four different control methods. User-selectable end points and alarms enable walk-away operation and ensure safe, consistent process performance. Patented, proprietary technology enables automated system response to in-line SciPres® pressure sensor feedback and the selectable maintenance of a user-definable flow rate, inlet filter pressure, or both. The system can optimize your filtration throughput by up to 30% while communicating real time process parameters via OPC to a plant historian. Up to two optional integrated scales can be used to deliver filtration precision by gravimetrically controlling operations.

Features and Benefits

- Walk-away automation improves filter throughput using patented rate pressure controlled feed
- Options for fully disposable, semi-disposable, or stainless CIP flowpaths
- Configurable for multiple or flexible processes
- Accommodates any commercially available filter
- Touch-screen interface with optional OPC connectivity for process documentation or remote control
- Mobile and compact base
- User configurable alarms and interlocks
- Optional integrated scale for highly accurate filtration endpoints

Note: SciLog®, SciFlex® and SciPres® are registered trademarks of Parker Hannifin Corporation.

The SciFlex® NFF semi-automated system offers four modes of process control:

- Constant Rate NFF:
  Maintain rate, monitor pressure.
  The system will ensure pressure does not exceed a high limit set point.
- Constant Pressure NFF:
  Maintain pressure, monitor rate.
  The system will ensure rate does not exceed a minimum set point.
- R/P Stat Method:
  The system maintains a constant rate, monitoring pressure until a selectable pressure is reached. At this pressure, the system immediately switches to constant pressure, monitoring rate (see Figure 1.) until a minimum set point is reached.
- Manual Operation:
  User definable motor set point

Batch control is ensured:

Recipes can be conveniently stored and recalled at the time of execution to save time and reduce the risk of parameters being installed incorrectly.

- Up to 10 sequential steps can be stored to provide continuous processing.

Applications

- Viral filtration
- Cell harvesting
- Chromatography column loading
- Clarification and sterilization

Performance Characteristics

R/P Stat Method

The SciFlex® NFF system incorporates the patented R/P Stat Method, an innovation which has resulted in significant improvements in filter life expectancy. This is done by selecting three simple process variables including initial flow rate, maximum inlet pressure, and minimum flow rate. By using the R/P Stat Method, as the membrane begins to foul, the SciFlex® NFF system dynamically adjusts the flow rate which allows additional product to pass through the filter before the membrane fouls.

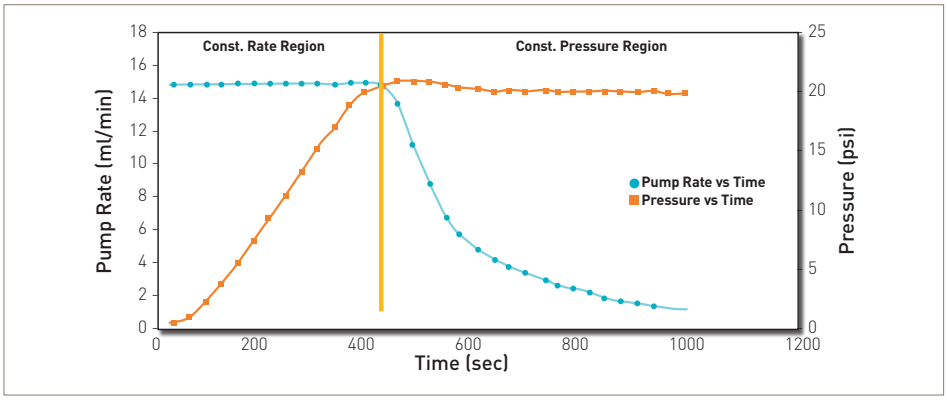

Fig. 1 - Normal Flow Filtration by R/P Stat Method

Specifications

	Description
Dimension	Footprint as small as 20" x 30" (0.50m x 0.76m), varies by model.
Enclosure & Rating	304 stainless steel framework, mobile platform with pharmaceutical grade casters, NEMA 4X, IP65 rated cabinet.
Pressure Sensors	Accommodates 3 x disposable pressure sensors.
Power	208V single phase, 60Hz, 20A; or 208V three phase, 60Hz, 20A; or 220V +/- 10% single phase, 50 Hz, 20A.
I/O Ports	Connections for 3 x SciPres® pressure sensors, connections for 2 x scales to monitor flux of media through filter.
Operational Mode	Constant rate, R/P Stat Method, constant pressure and manual mode.

Options and Accessories

- IQ/OQ documentation package to support validation efforts
- SciLog® sensors
- Single-use bioprocessing containers and manifolds
- WeighStation™
- Test manifold
- Several possible pump configurations

Ordering Information

Please contact your local Parker domnick hunter representative to discuss how these systems can be configured for your needs.

Parker domnick hunter has a continuous policy of product development and although the Company reserves the right to change specifications, it attempts to keep customers informed of any alterations. This publication is for general information only and customers are requested to contact our Process Filtration Sales Department for detailed information and advice on a products suitability for specific applications. All products are sold subject to the company's Standard conditions of sale.

Europe: +44 (0)191 4105121 dhprocess@parker.com - North America: +1 608 824 0500 dhpsales.na@parker.com www.parker.com/dhsingleuse

ENERGOEKONOM spol. s r.o., Wolkerova 433, CZ-250 82 Úvaly, Czech Republic, Tel.: +420 281 981 055, info@energoekonom.cz, www.energoekonom.cz

SciLog® SciFlex®
Filter and Dispense System

- final bulk filtration & dispense
- manual, semi or fully automated

The SciLog® SciFlex® Filter and Dispense System is an automated single-use system for the bulk filtration and container fill of purified biopharmaceuticals.

The two operations can be performed within a completely enclosed environment giving maximum protection to operator and product alike. An in-line filter integrity test provides assurance the filtration has been effective prior to filling into containers.

The SciLog® SciFlex® Filter and Dispense System's open architecture design accommodates Parker domnick hunter or any other commercially available filter.

Note: SciLog®, SciFlex®, SciPres® and WeighStation™ are registered trademarks of Parker Hannifin Corporation.

Features and Benefits

- Automated system for performing final bulk filtration and dispensing
- Integrated WeighStation™ provides gravimetric dispensing control.
- SciPres® Pressure Sensors and R/P Stat Method incorporated to ensure validated pressure limits are not exceeded during critical sterilizing-grade filtration
- Touch-screen interface with OPC connectivity for process documentation
- Mobile and compact base
- User and consumable alarms and interlocks
- Four standard filtration modes of control
- Closed system processing
- Intuitive easy to learn and use software
- Barcode interlocking mechanism prevents operation with incorrectly loaded manifolds
- Integrated label printer allows container and documentation labelling with recipe parameters on labels suitable for cryogenic storage
- Printer alarms if no labels are loaded to prevent data loss
- Fully disposable flow path
- Folding trays for documentation and tube welders
- A variety of sterile disconnectors are available

The SciLog® SciFlex® Filter and Dispense System offers four modes of process control:

- Constant Rate NFF:
  Maintain rate, monitor pressure.
  The system will ensure pressure does not exceed a high limit set point.
- Constant Pressure NFF:
  Maintain pressure, monitor rate.
  The system will ensure rate does not exceed a minimum set point.
- R/P Stat Method:
  The system maintains a constant rate, monitoring pressure until a selectable pressure is reached. At this pressure, the system immediately switches to constant pressure, monitoring rate until a minimum set point is reached.
- Manual Operation:
  User definable motor set point

Batch control is ensured:
Recipes can be conveniently stored and recalled at the time of execution to save time and reduce the risk of parameters being installed incorrectly.

Up to 10 sequential steps can be stored to provide continuous processing.

The SciLog® SciFlex® Filter and Dispense system automates a 10 step process:

1. Water flush to waste
2. Filter equilibration to waste
3. Air purge to waste
4. Product filtration to BPC
5. Air purge to maximize recovery
6. In-line filter integrity test
7. Reconfigure system for dispensing
8. Dispense and bottle manifolds primed
9. Container filling
10. Product recovery

Specifications

	Description
Dimensions	Operating footprint 70¨ x 28¨ (1.7m x 0.7m)
Enclosure & Rating	304 stainless steel framework, mobile platform with pharmaceutical grade casters, NEMA 4X, IP65 rated cabinet
Power	230V +/- 10%, 1P/3P, 50/60Hz (Power section)
I/O Ports	Auxillary ports for balances, mixers and sensors
Operational Mode	Constant rate, R/P Stat Method, constant pressure and manual mode
Dispense Capacity	Up to 250L of final drug substance can be dispensed into bags or bottles in aliquots of 100mL to 2L
Minimum Dispense Accuracy	±10g

Options and Accessories

- Parker domnick hunter pre and membrane filters
- SciLog® sensors
- Single-use bioprocessing containers and manifolds
- Test manifold
- IQ/OQ documentation package to support validation efforts
- WeighStation™
- Serialized weight confirmation kits

Ordering Information

Please contact your local Parker domnick hunter representative to discuss how these systems can be configured for your needs.

Parker domnick hunter has a continuous policy of product development and although the Company reserves the right to change specifications, it attempts to keep customers informed of any alterations. This publication is for general information only and customers are requested to contact our Process Filtration Sales Department for detailed information and advice on a products suitability for specific applications. All products are sold subject to the company's Standard conditions of sale.

Europe: +44 (0)191 4105121 dhprocess@parker.com - North America: +1 608 824 0500 dhpsales.na@parker.com www.parker.com/dhsingleuse

ENERGOEKONOM spol. s r.o., Wolkerova 433, CZ-250 82 Úvaly, Czech Republic, Tel.: +420 281 981 055, info@energoekonom.cz, www.energoekonom.cz

SciLog® SciFlex® TFF

- intelligent bioprocessing system
- semi-automated TFF

Parker domnick hunter

The SciLog® SciFlex® TFF is an automated tangential flow filtration system.

The SciFlex® TFF is a semi-automated, single-use tangential flow filtration (TFF) system that automatically monitors, adjusts and documents pressures and flow rate to optimize filtration speed and maximize filter life and efficiency, eliminating the need for constant monitoring during runs.

The SciFlex® system's 'Open Architecture' design means there is no need to change filter or membrane types because this system will work with any supplier's filter. An integrated scale can be used to gravimetrically control concentration, while the inline SciPres® pressure sensors monitor transmembrane pressure to prevent extreme pressure over the membrane.

Features and Benefits

- Automated onboard filtration methods
- OPC data collection via ethernet, or on a USB flash memory in CSV format
- Integrated SciPres® pressure sensors
- Safe, walk-away system operation
- Intuitive application interface
- 'Open Architecture' engineering enables this system to work with most filters or membranes

Note: SciLog®, SciFlex® and SciPres® are registered trademarks of Parker Hannifin Corporation.

The SciFlex® TFF semi-automated system offers three modes of process control:

- Constant Rate TFF:
  Maintain rate, monitor pressure.
  The system will ensure pressure does not exceed set point.
- Constant Pressure TFF:
  Maintain pressure, monitor rate.
  The system will ensure rate does not exceed set point.
- Manual Operation:
  User definable motor set point.
- Constant Rate / Constant Pressure TFF is available as an optional upgrade:
  Maintain rate set by user as well as transmembrane pressure by modulating a nonproduct contact proportional valve in the retentate line. The system will ensure pressure does not exceed set point.

Batch control is ensured:

Recipes can be conveniently stored and recalled at the time of execution to save time and reduce the risk of parameters being installed incorrectly.

- Up to 10 sequential steps can be stored to provide continuous processing.

Simple Concentration Method Example:

- A user selected concentration factor is implemented as soon as the run begins an initial weight set point is established from the integrated scale.
- Filtration continues until the predetermined concentration factor is reached, while the inline pressure sensors monitor transmembrane pressure (TMP) to prevent extreme pressures over the membrane.
- The SciFlex® automatically stops the method when the target weight is reached and displays a note to prevent accidental restart of the system at the endpoint.
- Diafiltration can then occur at any time after the note is cleared in another fully automated mode.

Specifications

	Description
Dimension	Footprint as small as 20" x 30" (0.50m x 0.76m), varies by model.
Enclosure & Rating	304 stainless steel framework, mobile platform with pharmaceutical-grade casters, NEMA 4X, IP65 rated cabinet
Pressure Sensors	Accommodates 3 x disposable pressure sensors. The calibrated pressure range is 0 - 60 psi. Any point within this range can be recalibrated using an external pressure reference source.
Power	208V single phase, 60Hz, 20A; or 208V three phase, 60Hz, 20A; or 220V +/- 10% single phase, 50 Hz, 20A
I/O Ports	Connections for 3 x SciPres® pressure sensors, 1 x SciCon® conductivity sensor, retentate quantification and permeate flow rate / quantification.
Operational Mode	Endpoint concentration and diafiltration modes, manual mode.

Options and Accessories

- The SciLog® SciFlex® system is available in three styles and can be configured to be fully automated
- TMP valve required to enable process point recover for paused states or alarms
- Constant rate / constant pressure TFF is available as an upgrade
- A variety of pumps is available for recirculation, permeate and diafiltration
- Automated transmembrane pressure valve
- Inlet fluid selection valve
- Retentate quantification, permeate quantification, electrical specification and pneumatic specification
- WeighStation™
- Test manifold
- SciLog® sensors
- Single-use bioprocessing containers and manifolds

Ordering Information

Please contact your local Parker domnick hunter representative to discuss how these systems can be configured for your needs.

Europe: +44 (0)191 4105121 dhprocess@parker.com - North America: +1 608 824 0500 dhpsales.na@parker.com www.parker.com/dhsingleuse

Parker domnick hunter has a continuous policy of product development and although the Company reserves the right to change specifications, it attempts to keep customers informed of any alterations. This publication is for general information only and customers are requested to contact our Process Filtration Sales Department for detailed information and advice on a products suitability for specific applications. All products are sold subject to the company's Standard conditions of sale.

ENERGOEKONOM spol. s r.o., Wolkerova 433, CZ-250 82 Úvaly, Czech Republic, Tel.: +420 281 981 055, info@energoekonom.cz, www.energoekonom.cz

SciLog® SciPure™

- fully-automated bioprocessing system
- GMP-ready TFF and NFF

Parker domnick hunter

Accelerate to market and reduce your purification costs with the SciLog® SciPure™ TFF and NFF Systems.

The SciPure™ system's user-friendly interface and menu-driven operation with data acquisition (21 CFR Part 11) make them ideal for GMP manufacturing. Systems come with a comprehensive documentation package that drastically reduces validation times.

Semi-manual to fully-automated operation makes tech transfer seamless and accommodates existing processes. The SciPure™ 'Open Architecture' design allows you to use any manufacturer's filters.

Contact Parker domnick hunter to discuss how the SciPure™ system can be quickly configured to accommodate your TFF and NFF needs. We have one of the shortest lead times in the industry.

Features and Benefits

- Maintains optimal TFF or NFF conditions with fully-automated control
- User-friendly with full colour graphical display, touch-screen and menu-driven operation
- User definable recipes and parameters, or real-time control
- Reduces purification costs by optimizing, controlling and documenting your processes
- Batch method generator
- Configured single-use or stainless steel manifolds with minimum hold-up volume
- Can be used with any manufacturer's filters
- Ethernet, OPC
- User administrative controls

Note: SciLog®, SciPure™ and SciPres® are trademarks of Parker Hannifin Corporation.

Applications

- Concentration
- Diafiltration
- Clarification / sterilization
- Media and buffer preparation
- Fluid transfer
- Mixing
- Chromatography and column loading
- Harvest
- Desalting
- Viral filtration

Configured Single-Use Manifolds

Individualized, pre-packaged and presterilized manifolds not only reduce cleaning and cleaning validation times, but also reduce setup time by engineering your application and ensuring installation success. You can set up recurring orders for just-in-time delivery of manifolds or they can be stored in secure inventory and atmosphere controlled warehouses. All flowpath designs are individually configured and drawn by in-house engineers.

Integrated with filters, sensors, and bioprocess containers, single-use manifolds can be pre-assembled and sterilized with SciLog® SciPres® pressure sensors, Parker domnick hunter filters (or filters of your choice), as well as single-use bioreactor, collection or hanging bioprocess containers.

Manifolds for TFF

Manifolds can be provided pre-assembled with sensors and integrated filter plate insert for flat sheet membranes or gamma-stable hollow fiber filters.

Specifications

	Description
Dimension	50" L x 30" W x 48" H (127cm L x 76.2cm W x 121.9cm H) other configurations available as system requires
Enclosure & Rating	304 Stainless Steel framework, Mobile platform with pharmaceutical grade casters, NEMA 4X, IP65 rated cabinet
Pneumatics	Compressed air, Nitrogen @ 35 psi
Power	208VAC 1/3 Ph, 480VAC 3Ph
I/O Ports	Standard connections for 3 SciPres® pressure sensors, 1 SciCon® conductivity sensor, retentate quantification and permeate flow rate / quantification. Additional I/O and digital communications available.
Operational Mode	Endpoint concentration and diafiltration modes, manual mode
International Quality Standards	RoHS, CE, ETL, CSA and UL
Plant Communications	OPC DA 2.0

Ordering Information

Please contact your local Parker domnick hunter representative to discuss how these systems can be configured for your needs.

Europe: +44 (0)191 4105121 dhprocess@parker.com - North America: +1 608 824 0500 dhpsales.na@parker.com www.parker.com/dhsingleuse

Parker domnick hunter has a continuous policy of product development and although the Company reserves the right to change specifications, it attempts to keep customers informed of any alterations. This publication is for general information only and customers are requested to contact our Process Filtration Sales Department for detailed information and advice on a products suitability for specific applications. All products are sold subject to the company's Standard conditions of sale.

ENERGOEKONOM spol. s r.o., Wolkerova 433, CZ-250 82 Úvaly, Czech Republic, Tel.: +420 281 981 055, info@energoekonom.cz, www.energoekonom.cz

SciLog® WeighStation™

- gravimetric fluid handling platform
- mobile bioprocessing workstation

Parker domnick hunter

The SciLog® WeighStation™ family is an assortment of mobile, compact, bioprocessing container holders with integrated scales for gravimetric fluid handling.

The SciLog® WeighStation™ serves as a flexible platform that provides quantitative and reproducible fluid measurement for a wide range of upstream and downstream applications.

With several biocontainer options, there is a WeighStation™ to match your process. Systems are available to accommodate 5L to 200L bags and are available with optional display heads or without load cells.

All SciLog® WeighStations™ can also be readily integrated into Parker domnick hunter or other manufacturers' systems, making them a convenient gravimetric solution for existing processes. The WeighStation™ can interface with your data historian, local display, printer or spreadsheet.

Note: SciLog® & WeighStation™ is a trademark of Parker Hannifin Corporation.

Features and Benefits

- Mobile design / small footprint
- Gravimetric application control
- Optional displays
- Multiple configurations
- Operator friendly design
- Easily integrates with existing systems

WeighStation™ Configuration

	Maximum Load	Practical Limits	Resolution	Footprint
WeighStation™	50Kg*	≤ 49.99Kg	10g	29¨x 29¨
WeighStation™ Dual	100Kg*	≤ 49.99Kg each	10g	29¨x 29¨
WeighStation™ Triple	150Kg*	≤ 49.99Kg each	10g	29¨x 29¨
WeighPro™	50Kg*	≤ 49.99Kg	10g	29¨x 29¨
WeighCart™ 100	200Kg	≤ 100L or ≤ 100Kg	2g	24¨ x 36¨
WeighCart™ 200	300Kg	≤ 200L or ≤ 200Kg	3g	30¨ x 42¨
WeighSmart™	50Kg each*	≤ 49.99Kg	10g	12¨ x 28¨

** Recommended volume < 35L per bioprocess container*

Model Options

WeighStation™
The WeighStation™ is a vertical bioprocess container (BPC) holder with gravimetric feedback. The base model can accommodate one to three (3) 50Kg single-use hanging BPC. Even when fully loaded, the four locking castors enable a single user to move the unit from location to location with ease. This mobile hanging balance eliminates the tiresome balancing of BPCs on mobile carts and provides safe complete drainage or 100% sample recovery without requiring a second operator to hold the BPC.

WeighPro™
The WeighPro™ is a mobile bioprocessing workstation that can be configured to any application. The unit includes a 50Kg vertical bioprocess container holder with gravimetric feedback and, as shown, optional adjustable filter, tubing, sensor and pump mounts. The system can be quickly configured for various bioprocessing projects without sacrificing space or capital.

WeighCart™
WeighCart™ is a mobile BPC holder with gravimetric feedback that easily accommodates 100L or 200L bioprocess containers. These two options are typically assembled with a 150Kg balance or a 300Kg balance. Stock system include a worktop and supports to mount a SciLog® laboratory automated liquid handling system. Other accessories and balance options are available.

WeighSmart™
The WeighSmart™ is a vertical BPC holder with gravimetric feedback that can be used with a GE ReadyKart. The units may also be integrated on your existing systems or wall mounted in your laboratory. The WeighSmart™ can handle up 50Kg and includes a height adjustable foot for easy integration and added stability.

Specifications

	Description
Materials of Construction	304 Stainless Steel, Pharmaceutical Grade Casters
Power	US 120 VAC 1 Phase 60 HZ < 2 AMP: EU 230 +/- 10% 50 HZ <2 AMP
Communications	IP 65 Communication Ports, RS232, SICS, RS485, Modbus, Analog: custom options available

Ordering Information

Models

900 - WSTN - ☐

Code	Model	Display	Load Cells
HO	WeighStation™ Single	✗	✗
NI	WeighStation™ Single	✗	✓
BLANK	WeighStation™ Single	✓	✓
DUAL-HO	WeighStation™ Dual	✗	✗
DUAL	WeighStation™ Dual	✗	✓
DUALT	WeighStation™ Dual	✓	✓
TRP	WeighStation™ Triple	✗	✗
TRP-NI	WeighStation™ Triple	✗	✓
TRPT	WeighStation™ Triple	✓	✓
PRO	WeighPro™	✓	✓
KRT-100	WeighCart™ (100L Bag Holder)	✓	✓
KRT-200	WeighCart™ (200L Bag Holder)	✓	✓
RKRT	WeighSmart™ for GE ReadyKart	✓	✓

Example: 900-WSTN is a SciLog® WeighStation™ Single with a display and load cell.

Parker domnick hunter has a continuous policy of product development and although the Company reserves the right to change specifications, it attempts to keep customers informed of any alterations. This publication is for general information only and customers are requested to contact our Process Filtration Sales Department for detailed information and advice on a products suitability for specific applications. All products are sold subject to the company's Standard conditions of sale.

Europe: +44 (0)191 4105121 dhprocess@parker.com - North America: +1 608 824 0500 dhpsales.na@parker.com www.parker.com/dhsingleuse

ENERGOEKONOM spol. s r.o., Wolkerova 433, CZ-250 82 Úvaly, Czech Republic, Tel.: +420 281 981 055, info@energoekonom.cz, www.energoekonom.cz

mitos-P

- Platinum-cured silicone tubing
- Ideal for manifold assemblies

mitos-P is a nonreinforced platinum-cured silicone tubing with lot and part number etched directly onto the tubing. mitos-P is well suited for performance in applications requiring use of peristaltic pumps and / or molded assemblies.

This precision tubing is manufactured with an automated control system that repeatedly measures the inner bore and wall thickness, maintaining a 0.002" to 0.008" tolerance.

Features and Benefits

- Lot number, tube ID and wall thickness marked on each tube
- Tightest wall tolerance available (0.002" to 0.008")
- Ideal for molding with other silicones into manifold assemblies (Ts, Ys, crosses, elbows and reducers)
- Certificate of conformance included with each order
- Manufactured in ISO Class 7 cleanroom
- Can be chemically or mechanically cleaned and can be sterilized by chemicals, autoclave or gamma-irradiation
- Available in four different wall thicknesses and internal diameters up to 1"

Ideal for use in peristaltic pumps and molded assemblies

mitos-P is the preferred platinum-cured silicone tubing for use in peristaltic pumps and molded assemblies because of its consistency in dimensions. This consistency delivers optimum performance in both applications by providing steady flow rates during pumping and by ensuring better bonding during molding, giving greater integrity to the assembly.

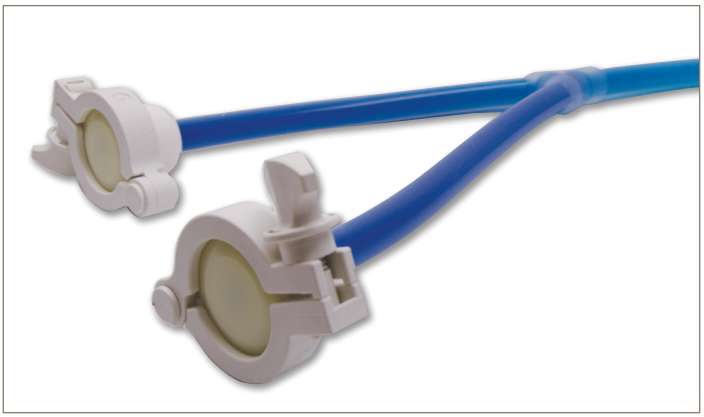

Applications

- Single-use applications
- Molded manifold assemblies
- Peristaltic pumps
- Bioprocess container systems
- Low pressure transfer lines

Specifications

Materials of Construction
- Material: Platinum-cured silicone

Optional Fittings
- Molded tri-clamp
- Radially-crimped 316L stainless steel
- All other industry standard connections

Working Temperature Range
-4 °F (-20 °C) to 176 °F (80 °C)

Physical Properties
- Elongation at break (%): ASTM D-412 550-1500
- Shore hardness: ASTM D-2240 55-57 Shore A
- Specific gravity: ASTM D-792 1.135-2.37
- Compression set: N/A 5.0-42.5%
- Tear strength: die B(PPI) ASTM D-412 200-500
- Gamma: up to 50 kGy
- Autoclave: 1 bar (14.5 psi) @ 121 °C (250 °F)

Certified Standard of Compliance
- FDA CFR 177.2600
- USP Class VI
- European Pharmacopoeia 3.1.9
- ISO 10993
- Additional validation testing performed, see validation guide for details

Sizes

Part Number	ID	OD	Wall	Pump size	Burst Pressure (psi)
02-MITOS-P-2	1/8"	1/4"	1/16"	300 / 500	80
02-MITOS-P-3	1/8"	5/16"	3/32"	300 / 500	120
03-MITOS-P-2	3/16"	5/16"	1/16"	300 / 500	60
03-MITOS-P-3	3/16"	3/8"	3/32"	300 / 500	80
04-MITOS-P-2	1/4"	3/8"	1/16"	300 / 500	50
04-MITOS-P-3	1/4"	7/16"	3/32"	300 / 500	60
04-MITOS-P-4	1/4"	1/2"	1/8"	600	80
05-MITOS-P-2	5/16"	7/16"	1/16"	600	30
05-MITOS-P-3	5/16"	1/2"	3/32"	600	50
06-MITOS-P-4	3/8"	5/8"	1/8"	600	60
06-MITOS-P-5	3/8"	3/4"	3/16"	700	80
08-MITOS-P-4	1/2"	3/4"	1/8"	600	50
08-MITOS-P-5	1/2"	7/8"	3/16"	700	60
10-MITOS-P-4	5/8"	7/8"	1/8"	700	30
10-MITOS-P-5	5/8"	1"	3/16"	700	50
12-MITOS-P-5	3/4"	1 1/8"	3/16"	700	50
16-MITOS-P-5	1"	1 3/8"	3/16"	700	30

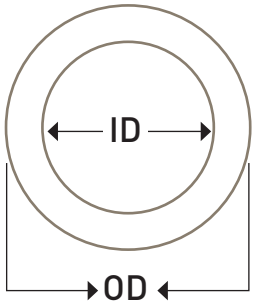

Parker domnick hunter technologies can be combined to produce integrated solutions that will speed up development times, increase efficiency and safety, and guarantee reproducible product quality.

Parker domnick hunter has a continuous policy of product development and although the Company reserves the right to change specifications, it attempts to keep customers informed of any alterations. This publication is for general information only and customers are requested to contact our Process Filtration Sales Department for detailed information and advice on a products suitability for specific applications. All products are sold subject to the company's Standard conditions of sale.

Europe: +44 (0)191 4105121 dhprocess@parker.com - North America: +1 608 824 0500 dhpsales.na@parker.com www.parker.com/dhsingleuse

ENERGOEKONOM spol. s r.o., Wolkerova 433, CZ-250 82 Úvaly, Czech Republic, Tel.: +420 281 981 055, info@energoekonom.cz, www.energoekonom.cz

mitos-R

- Reinforced platinum-cured silicone tubing
- Withstands high pressure, resists kinking

mitos-R is a platinum-cured silicone hose with polyester fibre braid reinforcement structure to maintain flexibility, withstand high pressure and resist kinking.

This hose can be molded with other silicones into manifold assemblies with molded tri-clamp, creating seamless and crevice-free fittings. It can also be used in radially-crimped hose assemblies.

Features and Benefits

- Lot number and customized information directly on hose with CLEAR-mark® label*
- Can be molded with other silicones into manifold assemblies (Ts, Ys, crosses, elbows and reducers)
- Animal derived component free
- Certificate of conformance with each order
- Manufactured in ISO Class 7 clean room
- Can be chemically or mechanically cleaned and can be sterilized by chemicals, autoclave or gamma-irradiation
- SIP / CIP capable
- Available with internal diameter up to 1¨

**CLEAR-mark® is a registered trademark of Integra Companies.*

Molded silicone fittings

Molded silicone fittings are the ideal option when there is need for an easily cleanable assembly, or to reduce the risk of cross-contamination. In each molded fitting, the elastomer chains of the platinum-cured silicone are cross-linked to create a permanent molecular bond to the tubing. A special feature of our molded tri-clamp is an integrated gasket that, when connected to another fitting, eliminates 50% of the sealing faces creating seamless and crevice-free fittings. For extra support, we offer a full stainless steel or polysulfone back-up cup on the outside of each molded fitting. Our plastic back-up cups have a unique wraparound design that fully encases the tri-clamp mold.

Applications

- Molded manifold assemblies
- High pressure transfer lines
- Single-use applications
- Radially-crimped hose assemblies

Specifications

Materials of Construction

- Material: Platinum-cured silicone with fibre braid reinforcement

Available Fittings

- Molded tri-clamp
- Radially-crimped 316L stainless steel
- All other industry standard connections

Sterilization

- Gamma Irradiation: Maximum of 50 kGy
- Autoclave: 1 bar (14.5 psi) @ 121°C (250°F)

Physical Properties

- Elongation at break (%): ASTM D-412 425%
- Shore hardness: ASTM D-2240 60 Shore A
- Tear strength: ASTM D-412 100 die B (PPI)
- Tensile strength: 1200 psi
- General temperature range: -100°F (-73.3°C) to 302°F (150°C)
- Brittle temperature: -100°F (-73.3°C)
- Max. operating temperature: 400°F (204.4°C)

Certified Standard of Compliance

- FDA CFR 177.2600
- USP Class VI
- European Pharmacopoeia 3.1.9
- ISO 10993
- Additional validation testing performed, see validation guide for details

Sizes

Part Number	ID	OD	*Recommended working pressure (psi) @ 68 °F	Minimum burst pressure (psi) @ 68 °F
02-MITOS-R	1/8"	3/8"	175	700
03-MITOS-R	3/16"	0.462"	170	650
04-MITOS-R	1/4"	1/2"	160	575
06-MITOS-R	3/8"	5/8"	150	550
08-MITOS-R	1/2"	7/8"	140	420
10-MITOS-R	5/8"	1"	115	400
12-MITOS-R	3/4"	1 1/4"	90	350
16-MITOS-R	1"	1 3/8"	60	225

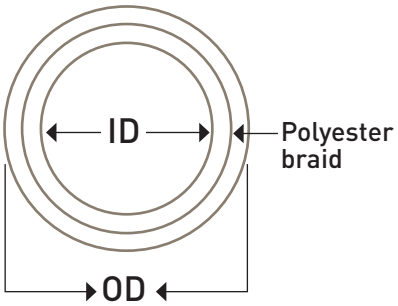

** Note: If part of a molded assembly, maximum operating pressure would change.*

Parker domnick hunter technologies can be combined to produce integrated solutions that will speed up development times, increase efficiency and safety, and guarantee reproducible product quality.

Parker domnick hunter has a continuous policy of product development and although the Company reserves the right to change specifications, it attempts to keep customers informed of any alterations. This publication is for general information only and customers are requested to contact our Process Filtration Sales Department for detailed information and advice on a products suitability for specific applications. All products are sold subject to the company's Standard conditions of sale.

Europe: +44 (0)191 4105121 dhprocess@parker.com - North America: +1 608 824 0500 dhpsales.na@parker.com www.parker.com/dhsingleuse

ENERGOEKONOM spol. s r.o., Wolkerova 433, CZ-250 82 Úvaly, Czech Republic, Tel.: +420 281 981 055, info@energoekonom.cz, www.energoekonom.cz

mitos-W

- Platinum-cured silicone hose, stainless steel wire reinforced tubing
- For high pressure or vacuum applications

mitos-W is a platinum-cured silicone hose with multi-ply fibre braids and 316 stainless steel helical wire reinforcement for high pressure or vacuum applications.

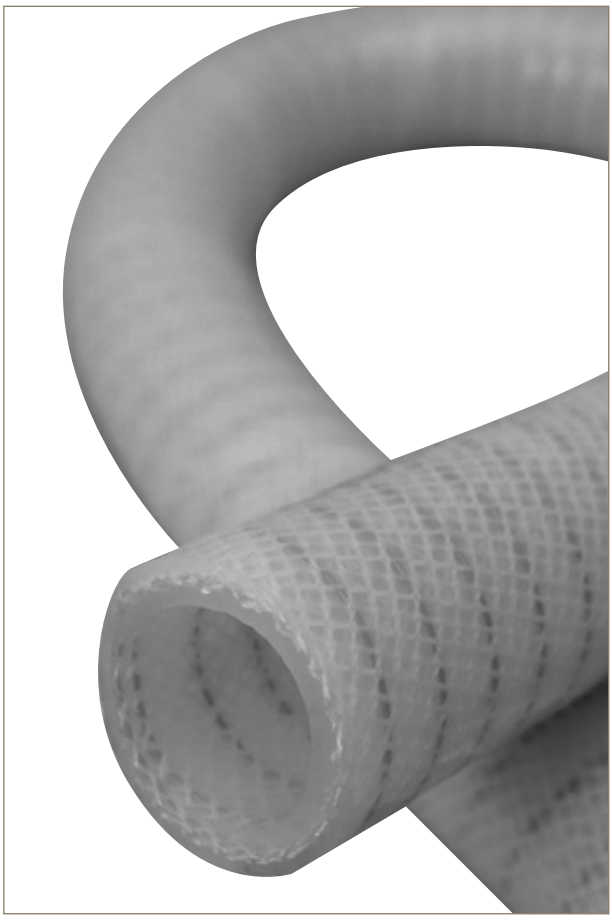

Features and Benefits

- Lot number and customized information directly on hose with CLEAR-mark® label*
- Manufactured free from known animal derived components
- Certificate of conformance with each order
- Smooth inner bore
- Can be chemically or mechanically cleaned and can be sterilized by chemicals, autoclave or gamma-irradiation
- SIP / CIP capable
- Available with internal diameter up to 3¨

**CLEAR-mark® is a registered trademark of Integra Companies.*

Fittings

Parker domnick hunter offers a comprehensive line of industry standard connection options. All stainless steel fittings are 316 stainless steel and are available in an electropolished (<15 Ra) or standard machine finish (20 Ra). Our stainless steel fittings are manufactured in a U.S. based facility dedicated exclusively to fabricating sanitary fittings for the biotech industry.
Parker domnick hunter fittings are unparalleled in material consistency, dimensions, surface finish, and craftsmanship.
All fittings feature a heat identifier which allow them to be fully traceable. Styles include molded tri-clamp, radially-crimped stainless steel (shown below with mitos-WCO hose) and other industry standard connections.

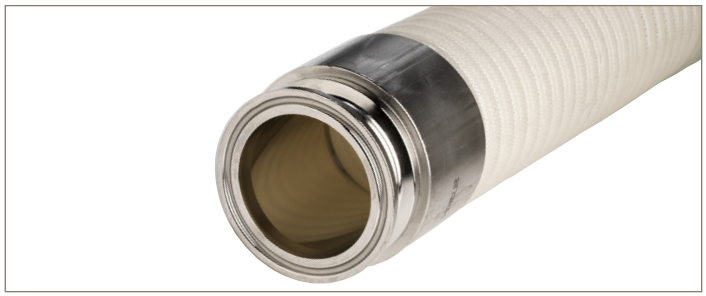

Applications

- Hose assemblies
- Bulk transfer lines
- High pressure transfer lines
- Vacuum applications
- SIP / CIP carts
- Load cells

Specifications

Materials of Construction
- Material: Platinum-cured silicone

Available Fittings
- Molded tri-clamp
- Radially-crimped 316L stainless steel
- All other industry standard connections

Temperature Rating
-80 °F (-62 °C) to 500 °F (260 °C)

Certified Standard of Compliance
- FDA CFR 177.2600
- USP Class VI
- European Pharmacopoeia 3.1.9
- ISO 10993
- Additional validation testing performed, contact Parker domnick hunter for further information

Sizes

Part Number	ID	Recommended working pressure (psi) @ 68 °F	Minimum burst pressure (psi) @ 68 °F	Vacuum rating (HG)	Bend radius (in.)
08-MITOS-W	1/2"	150	500	29.9	3.0
12-MITOS-W	3/4"	125	500	29.9	4.0
16-MITOS-W	1"	125	500	29.9	6.0
24-MITOS-W	1 1/2"	125	500	29.9	8.0
32-MITOS-W	2"	100	350	29.9	8.0
40-MITOS-W	2 1/2"	cf	cf	cf	cf
48-MITOS-W	3"	cf	cf	cf	cf

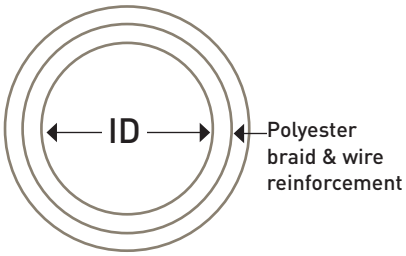

Parker domnick hunter technologies can be combined to produce integrated solutions that will speed up development times, increase efficiency and safety, and guarantee reproducible product quality.

Parker domnick hunter has a continuous policy of product development and although the Company reserves the right to change specifications, it attempts to keep customers informed of any alterations. This publication is for general information only and customers are requested to contact our Process Filtration Sales Department for detailed information and advice on a products suitability for specific applications. All products are sold subject to the company's Standard conditions of sale.

Europe: +44 (0)191 4105121 dhprocess@parker.com - North America: +1 608 824 0500 dhpsales.na@parker.com www.parker.com/dhsingleuse

ENERGOEKONOM spol. s r.o., Wolkerova 433, CZ-250 82 Úvaly, Czech Republic, Tel.: +420 281 981 055, info@energoekonom.cz, www.energoekonom.cz

mitos-WCO

- Platinum-cured silicone hose, stainless steel wire reinforced, with convoluted exterior
- For high pressure or vacuum applications with excellent bend radius

mitos-WCO is a platinum-cured silicone hose with multi-ply fibre braids, 316 stainless steel helical wire reinforcement and a convoluted exterior. The convoluted exterior provides excellent bend radius and resistance to kinking.

Features and Benefits

- Lot number and customized information directly on hose with CLEAR-mark® label*
- Animal derived component free
- Certificate of conformance with each order
- Smooth inner bore
- Superior bend radius and resistance to kinking
- Can be sterilized by autoclave or gamma-irradiation
- SIP / CIP capable
- Available with internal diameter up to 3¨

**CLEAR-mark® is a registered trademark of Integra Companies.*

Radially-crimped stainless steel

Parker domnick hunter offers a comprehensive line of industry standard connection options. All stainless steel fittings are 316 stainless steel and are available in an electropolished (<15 Ra) or standard machine finish (20 Ra). Our stainless steel fittings are manufactured in a U.S. based facility dedicated exclusively to fabricating sanitary fittings for the biotech industry.
Parker domnick hunter fittings are unparalleled in material consistency, dimensions, surface finish, and craftsmanship. All fittings feature a heat identifier which allow them to be fully traceable. Styles include tri-clamp, elbow, NPT, flange, and other industry standard connections.

Applications

- Hose assemblies
- Bulk transfer lines
- High pressure transfer lines
- Vacuum applications
- SIP / CIP carts
- Load cells

Specifications

Materials of construction

- Material: Platinum-cured silicone
  Stainless steel wire
  Fibre mesh

Available Fittings

- Radially-crimped 316L stainless steel
- All other industry standard connections

Temperature rating

-80 °F (-62 °C) to 500 °F (260 °C)

Certified standard of compliance

- FDA CFR 177.2600
- USP Class VI
- European Pharmacopoeia 3.1.9
- ISO 10993

Sizes

Part Number	ID	Recommended working pressure (psi) @ 68 °F	Minimum burst pressure (psi) @ 68 °F	Vacuum rating (HG)	Bend radius (in.)
08-MITOS-WCO	1/2"	150	500	29.9	2.0
12-MITOS-WCO	3/4"	150	500	29.9	2.5
16-MITOS-WCO	1"	125	500	29.9	4.5
24-MITOS-WCO	1 1/2"	100	500	29.9	6.0
32-MITOS-WCO	2"	100	350	29.9	7.5

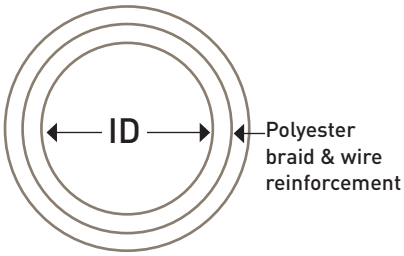

Parker domnick hunter technologies can be combined to produce integrated solutions that will speed up development times, increase efficiency and safety, and guarantee reproducible product quality.

Parker domnick hunter has a continuous policy of product development and although the Company reserves the right to change specifications, it attempts to keep customers informed of any alterations. This publication is for general information only and customers are requested to contact our Process Filtration Sales Department for detailed information and advice on a products suitability for specific applications. All products are sold subject to the company's Standard conditions of sale.

Europe: +44 (0)191 4105121 dhprocess@parker.com - North America: +1 608 824 0500 dhpsales.na@parker.com www.parker.com/dhsingleuse

ENERGOEKONOM spol. s r.o., Wolkerova 433, CZ-250 82 Úvaly, Czech Republic, Tel.: +420 281 981 055, info@energoekonom.cz, www.energoekonom.cz

Molded silicone manifolds

- Permanent connection prevents product loss
- Seamless, crevice-free, eliminates entrapment areas

With custom-designed manifolds, Parker domnick hunter molds imagination into reality. Whether a foot-long piece of tubing with sanitary ends or a manifold with over 100 junctions, Parker domnick hunter can mold single- or multi-use systems tailored to your application.

Our proprietary overmolding technology allows for any configuration of Ys, Ts, crosses, reducers, elbows and molded tri-clamps with unlimited lengths between molds. Inside diameters are available from $^1/_8$" to 1".

Each mold is molecularly bonded to the tubing by cross-linking of the elastomer chains. This permanent connection prevents product loss and contamination commonly experienced with hose barb failures. Internally, molds are seamless and crevice-free to eliminate entrapment areas and potential contamination.

Molded silicone manifolds can be created out of mitos-P or mitos-R tubing. Parker domnick hunter molded manifolds are fully validated and delivered with a certificate of conformance.

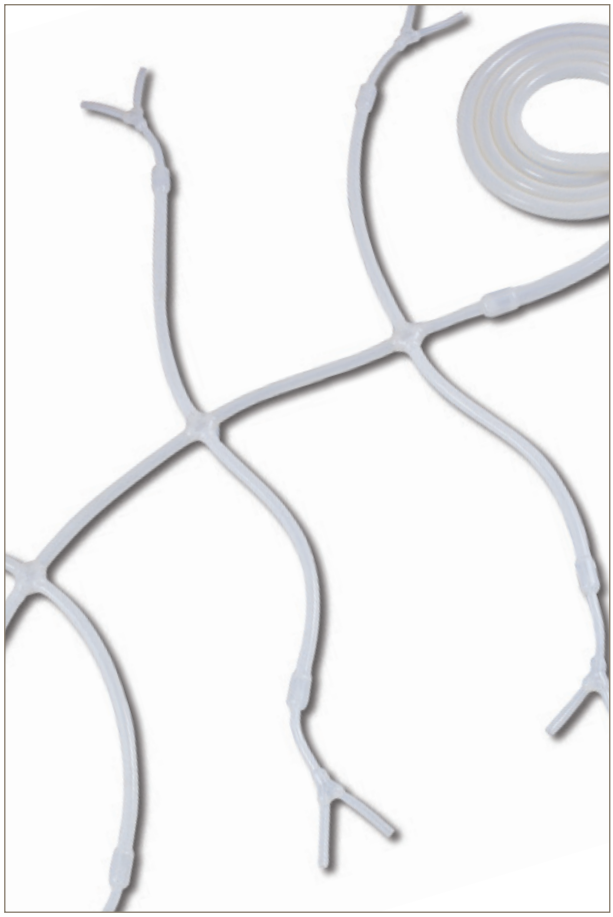

Features and Benefits

- Stronger, seamless molded junctions eliminate entrapment areas
- Configured for your requirements
- All materials used in the manufacture of the single manifolds are fully traceable
- Molded silicone manifolds are manufactured free from known animal components
- Single manifolds can be gamma irradiated
- Storing at room temperature (~65-70 °F) is recommended for silicone manifolds. Shelf-life: physical property test data is available for product stored after irradiation
- Manufactured in a Class 7 (10,000) cleanroom

Molded silicone fittings

Molded silicone fittings are the ideal option when there is need for an easily cleanable assembly, or to reduce the risk of cross-contamination. In each molded fitting, the elastomer chains of the platinum-cured silicone are cross-linked to create a permanent molecular bond to the tubing. A special feature of our molded tri-clamp is an integrated gasket that, when connected to another fitting, eliminates 50% of the sealing faces creating seamless and crevice-free fittings. For extra support, we offer a full stainless steel or polysulfone back-up cup on the outside of each molded fitting. Our plastic back-up cups have a unique wraparound design that fully encases the tri-clamp mold.

Cross Mold

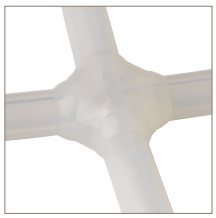

Y Mold

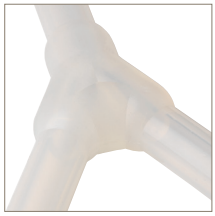

T Mold

Silicone Molded Stopper

Reducer Mold

Specifications

Mechanical properties of mitos-P tubing:

- Elongation at break: ASTM D-412 550-1500%
- Shore hardness: ASTM D-2240 55-57 Shore A
- Specific gravity: ASTM D-792 1.135-2.37
- Compression set: 5.0 - 42.5%
- Tear strength: die B (PPI) ASTM D-412 200-500

mitos-P biocompatibility, physicochemical and particulate test results

Test Description	Test Reference	Results	Details
Biocompatibility tests			
Biological reactivity test, *in vivo* Class VI	USP <88>	Pass	Extraction conditions 70 °C
Hemolysis test	ISO 10993-4 ASTM F756-00	Pass	The test article is considered non-hemolytic under the experimental conditions employed
Cytotoxicity	ISO 10993-5	Pass	Test item considered non-cytoxic
Implantation test	ISO 10993-6	Pass	Did not produce a biological response
Irritation & sanitization	ISO 10993-10	Pass	The skin treated with the test article extracts exhibited no reaction to the challenge (0% sensitization)
Acute systemic toxicity test	ISO 10993-11	Pass	Extraction conditions 70 °C ± 2 °C for 24 hrs
Physicochemical tests			
Test for plastics; Silicone elastomer	EU PH 6th 2009, 3.1.9	Pass	N/A
Bacterial Endotoxins - LAL test	USP <85>	Report	100 cm^2 of the test article contains 0.6505 EU (0.0121 EU/ml)
TOC analysis	USP 32, NF 27, 2009 <643>	Report	1.992 mg C/L
USP particulate / microscopic particulate count	USP 32, NF 27, 2009 <788>	Report	5 particulates / mL with size ≥ 25 µm

Summary of extractables results for gamma-irradiated platinum-cured silicone manifold*

	Volatile Extractables	Semi-Volatile & Non-Volatile Extractables	Acetate & Formate
Water	Trimethyl silanol: 0.7 ppm Low molecular weight alcohol residues: 8ppm, *e.g. ethanol, IPA*	• Plasticizers / residues: 1.1 ppm	Formate: 19 ppm Acetate: 9 ppm
PBS, pH 3	Trimethyl silanol: 0.5 ppm Low molecular weight alcohol residues: 8ppm	• Plasticizers: 1ppm	Formate: 19 ppm Acetate: 35 ppm
PBS, pH 10	Trimethyl silanol: 0.7 ppm Low molecular weight alcohol residues: 6ppm	• Plasticizers / residues: 2.2 ppm • Fatty acid slip agents: 5.9 ppm	Formate: 28 ppm Acetate: 11 ppm
20% Ethanol	None detected	• Plasticizers / residues: 12.6 ppm • Paraffin oils: 0.8 ppm • Residual solvent: 0.8 ppm	Formate: 18 ppm Acetate: 9 ppm

* *The data below is derived from a gamma irradiated, complete molded tubing system, including representative junctions and fittings. Extraction volume: 100 mL. Surface area: 930 cm^2. Extractions were conducted under accelerated conditions for 3 days at 40 °C with water; PBS, pH3; PBS, pH 10; or 20% ethanol, to simulate 24 day exposure. Please note, that although values are quantitative, they are meant to be qualitative as a starting point for customer leachables studies.*

Detailed data and testing are available upon request. Please contact your local Parker domnick hunter representative.

Services

Samples and prototypes of silicone manifolds to fit your application are available upon request.

Open Architecture allows us to work with existing specifications or upgrade to fit your application needs.

Regulatory statements

Statement Available	Result
REACH Compliant	**Yes**
RoHS Compliant	**Yes**
Drug Master File *(Listing numbers available)*	**Yes**
Latex	**No**
Phthalates	**No**
PVC	**No**
Animal Derived Components	**No**

Parker domnick hunter technologies can be combined to produce integrated solutions that will speed up development times, increase efficiency and safety, and guarantee reproducible product quality.
Visit www.parker.com/dhsingleuse

Parker domnick hunter has a continuous policy of product development and although the Company reserves the right to change specifications, it attempts to keep customers informed of any alterations. This publication is for general information only and customers are requested to contact our Process Filtration Sales Department for detailed information and advice on a products suitability for specific applications. All products are sold subject to the company's Standard conditions of sale.

Europe: +44 (0)191 4105121 dhprocess@parker.com - North America: +1 608 824 0500 dhpsales.na@parker.com www.parker.com/dhsingleuse

ENERGOEKONOM spol. s r.o., Wolkerova 433, CZ-250 82 Úvaly, Czech Republic, Tel.: +420 281 981 055, info@energoekonom.cz, www.energoekonom.cz

DuraPure™
Bioprocess container systems

- Single-use liquid handling systems
- Customized for your requirements

Parker domnick hunter

Parker domnick hunter has expanded its DuraPure™ bioprocess container line into an integrated fluid-handling system designed for durability and purity.

Each system is designed to seamlessly integrate with the rest of your process, whether it is going from media prep to cell culture, or ultra-filtration to final fill. DuraPure™ bioprocess container systems are available with the 2-ply DuraPure films, or the single-ply DuraPure™ C93 film.

DuraPure™ containers are offered in sizes ranging from 1L to 2000L in 3 dimensional bag designs. For 2 dimensional pillow bags the sizes range from 50ml to 200L. The product contact layer of the 2-ply DuraPure™ container is made of a LDPE (Low Density Polyethylene) film, and the external layer is made of a LLDPE film (Lineal Low Density Polyethylene) film.

DuraPure™ C93 film is a high purity coextruded biopharmaceutical-grade film designed to provide the best combination of strength, flexibility, inert product contact and gas barrier. The product contact layer is ultra low density polyethylene (ULDPE). The gas barrier layer is polyethylene vinyl acetate copolymers (EVOH).

Note: DuraPure™ is a trademark of Parker Hannifin Corporation.

Features and Benefits

- 2D & 3D DuraPure™ and DuraPure™ C93 containers are available in 15L to 2000L sizes
- A range of ports is available from $^{1}/_{8}$" to 1"
- mitos-P platinum-cured tubing with molded junctions and sanitary fittings

Ideal for use in peristaltic pumps and molded assemblies

mitos-P is the preferred platinum-cured silicone tubing for use in peristaltic pumps and molded assemblies because of its consistency in dimensions. This consistency delivers optimum performance in both applications by providing steady flow rates during pumping and by ensuring better bonding during molding, giving greater integrity to the assembly.

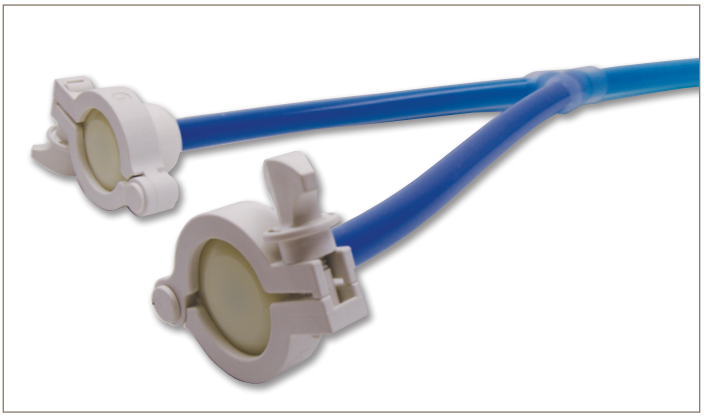

Purity

- USP Class VI
- LAL testing
- Systemic toxicity testing
- Intracutaneous reactivity testing
- Muscle implantation testing

System Integration

- Peristaltic pumps
- Filters
- Sampling systems
- Sensors

Specifications

DuraPure™ Bioprocess Container films
Outer layer film
Property test protocol average values

- Material: Lineal low density polyethylene (LLDPE)
- Physical properties:
  - Specific gravity: ASTM D-792 0.96
- Film strength:
  - Tensile Strength: ASTM D-882 3,100 psi
  - Elongation: ASTM D-882 >650%
  - Elastic Modulus: ASTM D-882 1,100 psi
  - Tear Resistance: ASTM D-1004 550 lbf/in
  - Puncture Resistance: FTMS 101B 22.4 lbf
- Barrier:
  - Water vapor transmission rate: ASTM E-96-80 0.11 g / (100 in^2*day)
  - Oxygen permeability: ASTM D-3985 0.28 cm^3 / (100 in^2*day*atm)
  - Carbon dioxide permeability: ASTM D-1434 0.58 cm^3 / (100 in^2*day*atm)

Inner layer film
Property test protocol average values

- Material: Low density polyethylene (LDPE)
- Physical properties:
  - Film Thickness: N/A 4 mil
- Film strength:
  - Tensile Strength: ASTM D-882 2,900 psi
  - Elongation: ASTM D-882 400%
  - Elastic Modulus: ASTM D-882 25,000 psi

DuraPure™ C93 film

- Material: The product contact layer is ultra low density polyethylene (ULDPE) and the gas barrier layer is polyethylene vinyl acetate copolymers (EVOH)
- Physical properties:
  - Film Thickness: N/A 0.325mm
  - Specific gravity: ASTM D-792 0.9 g/cm^3
- Film Strength
  - Tensile Strength: ASTM D-882 13.5 MPa
  - Elongation: ASTM D-882 290%
  - Elastic Modulus: ASTM D-882 360 MPa
- Barrier
  - Water vapor transmission rate: ASTM F-1249 0.33 g/(m^2*day)
  - Oxygen permeability: ASTM D-3985 <0.05 cm^3/(m^2*day*atm)
  - Carbon dioxide permeability: ASTM F-2476 <0.02 cm^3/(m^2*day*atm)

Connectors

We provide a full line of connectors from many manufacturers that are all compatible with Parker domnick hunter components and systems. With every different type of connector option available, it is our goal to be able to provide our customers with one-stop-shop convenience to meet all connection needs.

Parker domnick hunter technologies can be combined to produce integrated solutions that will speed up development times, increase efficiency and safety, and guarantee reproducible product quality.

Parker domnick hunter has a continuous policy of product development and although the Company reserves the right to change specifications, it attempts to keep customers informed of any alterations. This publication is for general information only and customers are requested to contact our Process Filtration Sales Department for detailed information and advice on a products suitability for specific applications. All products are sold subject to the company's Standard conditions of sale.

Europe: +44 (0)191 4105121 dhprocess@parker.com - North America: +1 608 824 0500 dhpsales.na@parker.com www.parker.com/dhsingleuse

ENERGOEKONOM spol. s r.o., Wolkerova 433, CZ-250 82 Úvaly, Czech Republic, Tel.: +420 281 981 055, info@energoekonom.cz, www.energoekonom.cz

DuraPure™ C93
Bioprocess container systems

- Single-use liquid handling systems
- Customized for your requirements

Parker domnick hunter

Parker domnick hunter has expanded its DuraPure™ C93 single ply bioprocess container line into an integrated fluid-handling system designed for durability and purity.

Each system is designed to seamlessly integrate with the rest of your process, whether it is going from media prep to cell culture, or ultrafiltration to final fill.

DuraPure™ C93 film is a high clarity medical film designed to provide the best combination of strength, flexibility, gas barrier and low extractables. The product contact layer of this 5-layer film is ultra low density polyethylene (ULDPE). The gas barrier layer is ethylene vinyl alcohol (EVOH). The recommended working temperature range of DuraPure™ C93 film is 0 °C to 60 °C, but it has been used in applications for short term exposures at temperatures less than -45 °C and up to 80 °C.

Note: DuraPure™ is a trademark of Parker Hannifin Corporation.

Features and Benefits

- 2D & 3D DuraPure™ C93 containers are available in 50ml to 2000L sizes
- A range of ports is available from $^{1}/_{8}$" to 1"
- mitos-P platinum-cured silicone tubing with molded junctions and sanitary fittings, or TPE tubing and fittings
- DuraPure™ C93 bioprocessing containers are manufactured free from known animal derived components
- All materials used in the manufacture of the DuraPure™ C93 BPCs are fully traceable
- DuraPure™ C93 BPCs can be gamma irradiated
- Storing at room temperature (~65-70 °F) is recommended for DuraPure™ C93 BPCs. Shelf-life: physical property test data is available for product stored after irradiation
- Manufactured in a Class 7 (10,000) cleanroom

DuraPure™ C93 film is a 5-layer co-extruded film

The 5 co-extruded layers of the 13 mil, (0.325 mm) thick DuraPure™ C93 film are shown at right. Ultra low density polyethylene is the fluid contact layer, ethylene vinyl alcohol is the gas barrier layer, and low density polyethylene is the outer layer. Together, these layers offer the best combination of strength, flexibility, gas barrier and low extractables.

Fluid Contact Side
ULDPE
TIE
EVOH
TIE
LDPE

Purity

- USP Class VI
- LAL testing
- Systemic toxicity testing
- Intracutaneous reactivity testing
- Muscle implantation testing
- Extremely good extractables profile
- Clean room manufacturing

System Integration

- Peristaltic pumps
- Filters
- Sampling systems
- Sensors

Specifications

Mechanical properties of DuraPure™ C93 BPC film

Mechanical properties:

- Film thickness: 0.325mm
- Specific gravity: ASTM D-792 0.9 g/cm^3
- Film strength:
  - Tensile strength: ASTM D-882 13.5 MPa
  - Elongation: ASTM D-882 290%
  - Elastic modulus: ASTM D-882 360 MPa
- Optical properties:
  - Haze: ASTM D-1003 7%
  - Clarity: ASTM D-1003 97%
  - Transmittance: ASTM D-1003 93%
- Barrier:
  - Water vapor transmission rate: ASTM F-1249 0.33 g / (m^2*day)
  - Oxygen permeability: ASTM D-3985 <0.05 cm^3 / (m^2*day*atm)
  - Carbon dioxide permeability: ASTM F-2476 <0.02 cm^3 / (m^2*day*atm)

Biocompatibility and physicochemical test results

Test Description	Test Reference	Results for Gamma-Irradiated DuraPure C93 Film
Biocompatibility tests		
USP VI for plastic	USP <88>	Pass
Hemolysis test	ISO 10993-4	Pass
Cytotoxicity	USP <87>	Pass
Implantation test	ISO 10993-6	Pass
Irritation & sensitization	ISO 10993-10	Pass
Acute systemic toxicity test	ISO 10993-11	Pass
Physicochemical tests		
Physicochemical test for plastics	USP <661>	Pass
European Pharmacopoeia 3.1.5	EP 5, 2005 chapter 3.1.5	Pass
LAL bacterial endotoxins assay	USP <85>	Report

Summary of extractables results for DuraPure™ C93 BPC*

	Volatile Extractables	Semi-Volatile & Non-Volatile Extractables	Acetate & Formate
Water	None detected	• Stabilizer: 0.5 ppm	Formate: None detected Acetate: 0.7 ppm
PBS, pH 3	Acetaldehyde: 0.15 ppm	• Fatty acid slip agents: 15 ppm *e.g. Hexanoic acid at 8 ppm* • Polyethylene constituents: 0.8 ppm *e.g. 2-Octanone at 0.5 ppm* • Stabilizers: 0.3 ppm	Formate: 1.4 ppm Acetate: 7.6 ppm
PBS, pH 10	None detected	• Fatty acid slip agents: 1.1 ppm • Polyethylene constituents: 0.3 ppm • Stabilizers: 1ppm *e.g. Irgafos at 0.7 ppm*	Formate: 1.8 ppm Acetate: 8.0 ppm
10% Ethanol	Acetaldehyde: 3.0 ppm	• Fatty acid slip agents: 20.5 ppm • Polyethylene constituents: 1.4 ppm • Stabilizers: 1ppm	Formate: 0.2 ppm Acetate: 0.2 ppm

** The data shown is derived from a gamma irradiated, complete bioprocessing system, including representative tubing, connectors and elastomers. Extraction volume: 500 mL. Surface area: 1150 cm^2. Extractions were conducted under accelerated conditions for 91 days at 40 °C, with water: PBS, pH3; PBS, pH 10; or 10% ethanol, to simulate 2 year exposure. Please note, although values are quantitative, they are meant to be qualitative as a starting point for customer leachables studies.*

Detailed data and test reports are available upon request. Please contact your local Parker domnick hunter representative.

Regulatory statements

Statement Available	Result
REACH Compliant	**Yes**
RoHS Compliant	**Yes**
Drug Master File *(Listing numbers available)*	**Yes**
Latex	**No**
Phthalates	**No**
PVC	**No**
Animal Derived Components	**No**

Services

Samples and prototypes of BPCs to fit your application are available upon request.

Open Architecture allows us to work with existing specifications or upgrade to fit your application needs.

Parker domnick hunter technologies can be combined to produce integrated solutions that will speed up development times, increase efficiency and safety, and guarantee reproducible product quality.
Visit www.parker.com/dhsingleuse

Parker domnick hunter has a continuous policy of product development and although the Company reserves the right to change specifications, it attempts to keep customers informed of any alterations. This publication is for general information only and customers are requested to contact our Process Filtration Sales Department for detailed information and advice on a products suitability for specific applications. All products are sold subject to the company's Standard conditions of sale.

Europe: +44 (0)191 4105121 dhprocess@parker.com - North America: +1 608 824 0500 dhpsales.na@parker.com www.parker.com/dhsingleuse

ENERGOEKONOM spol. s r.o., Wolkerova 433, CZ-250 82 Úvaly, Czech Republic, Tel.: +420 281 981 055, info@energoekonom.cz, www.energoekonom.cz

klave-it™ Bioprocess Containers

- Autoclavable single-use containers
- Kynar® PVDF film for strength and flexibility

Parker domnick hunter

klave-it™ autoclavable bioprocess containers from Parker domnick hunter are made of a select Kynar® PVDF film designed to maintain flexibility, strength and impact resistance after sterilization by autoclave.

Autoclaving bioprocess container systems in-house provides greater control and more adaptive sampling procedures. klave-it™ bioprocess containers can also be filled and then autoclaved. Because klave-it™ film is constructed of a fluorinated polymer, it has excellent chemical resistance to minimize leachables, making it safe for use with critical products.

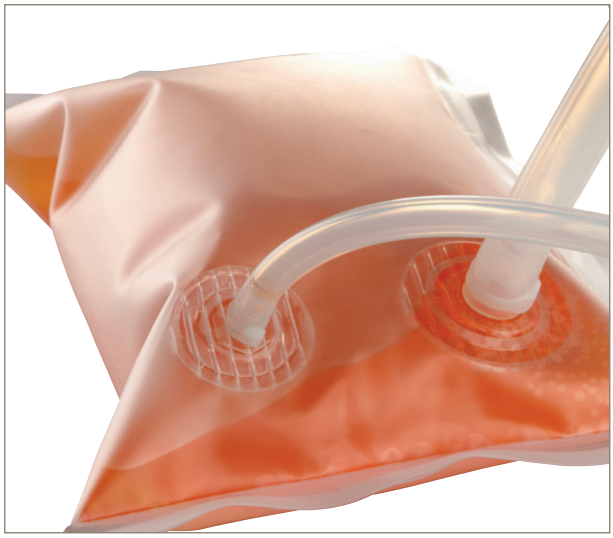

Note: klave-it™ is a trademark of Parker Hannifin Corporation.

Features and Benefits

- Low TOC (total organic carbon)
- Low permeability
- USP Class VI
- Animal derived component free
- Available in pillow style
- Ports are available in $^1/_8$", $^1/_4$", $^3/_8$" and $^1/_2$" sizes

Specifications

Materials of Construction

- Material: Kynar® PVDF film

Fittings

- All standard industry connections

Working Temperature Range

-20°C (-4°F) to +80°C (176°F)

Physical Properties

- Elongation at Break (%:) ASTM D-638 50-200
- Shore Hardness: ASTM D-2240 65-70 Shore D
- Specific Gravity: ASTM D-792 1.76-1.79
- Tensile Break Strength: (psi) ASTM D-638 2,500-5,000

Sterilization

- Gamma Irradiation: Maximum of 50 kGy
- Autoclave: 1 bar (14.5 psi) @ 121°C (250°F)

Barrier

- Oxygen Permeability: ASTM D-3985 3.8 - 4.6 x 10^{-6} g/100 in^2/day
- Carbon Dioxide Permeability: ASTM D-1434 2.3 x 10^{-5} cm^3/100 in^2/day
- Water Vapor Transmission Rate: ASTM E96-80 4.2 x 10^{-6} cm^3/100 in^2/day

Certified Standard of Compliance

- USP Class VI testing
- LAL testing
- Systematic toxicity testing

Applications

Any application in which pre- or post-filling sterilization by autoclaving is required

Parker domnick hunter technologies can be combined to produce integrated solutions that will speed up development times, increase efficiency and safety, and guarantee reproducible product quality.

Parker domnick hunter has a continuous policy of product development and although the Company reserves the right to change specifications, it attempts to keep customers informed of any alterations. This publication is for general information only and customers are requested to contact our Process Filtration Sales Department for detailed information and advice on a products suitability for specific applications. All products are sold subject to the company's Standard conditions of sale.

Europe: +44 (0)191 4105121 dhprocess@parker.com - North America: +1 608 824 0500 dhpsales.na@parker.com www.parker.com/dhsingleuse

DS_P_32_04/13 Rev. 1A

ENERGOEKONOM spol. s r.o., Wolkerova 433, CZ-250 82 Úvaly, Czech Republic, Tel.: +420 281 981 055, info@energoekonom.cz, www.energoekonom.cz

FREE FLOW® Valves

- Quick change valve elements
- Pneumatic & manual actuated
- Crevice-free, steam through flow path

FREE FLOW® valves from Parker domnick hunter are designed specifically for the biotech industry. The straight through bore eliminates turbulence to significantly reduce shear in the process line.

The unique FREE FLOW® valve utilizes a replaceable valve element that has a smooth, obstruction free bore. The valve is designed to control the flow of the liquid from outside of the tubing, avoiding direct contact of the valve components with the fluid flow path. The crevice free flow path is conducive to easy and thorough cleaning, and the quick release hinge technology allows fast element changes without the use of tools.

FREE FLOW® valves are available in three tubing sizes; $^1/_2$", $^3/_4$" and 1" with three tubing element options, or without an element.

Manually operated valves are easily actuated by rotating the hand wheel until snug. There is no need for tools. Pneumatically operated valves come ready to connect to an air supply. No field adjustments are necessary.

Note: FREE FLOW® is a registered trademark of Parker Hannifin Corporation.

Features and Benefits

- Quick release, tool free element change out
- Easy to clean, seamless straight through flow path with no crevices to collect residue
- Ideal for clamping tubing to isolate filters
- Three sizes: $^1/_2$", $^3/_4$" and 1"
- Valve element material options include: platinum-cured silicone, PTFE reinforced silicone (PCS) and PTFE reinforced perfluoro-elastomer (PFL) tubing *(Contact Parker domnick hunter for size and material availability)*
- Steam through capability
- Replaces troublesome weir type diaphragm valves

FREE FLOW® Valve Elements

FREE FLOW® valve elements are available in platinum-cured silicone, PCS or PFL. PFL elements are constructed with crimped 316 stainless steel ends.

Platinum-cured silicone and PCS elements are constructed with tri-clamp type molecularly bonded, molded silicone ends with integrated gaskets ends, or with crimped 316 stainless steel ends.

In each molded fitting, the elastomer chains of the platinum-cured silicone are cross-linked to create a permanent molecular bond to the tubing. A special feature of our molded tri-clamp is an integrated gasket that, when connected to another fitting, eliminates 50% of the sealing faces creating seamless and crevice-free fittings. For extra support, we offer a full stainless steel on the outside of each molded fitting.

Specifications

Pneumatically actuated valve Materials of construction

- Body: 304 stainless steel
- Valve sealing anvils: polyphenylene sulfide (PPS)
- Springs: 17-4PH stainless steel
- Fasteners: 18-8 stainless steel
- Seals: Nitrile and EPDM
- Stem guides: PEEK
- Piston stop: PVDF
- Lubricant: Silicone gel

Note: 316L stainless steel is available by special order.

Manually actuated valve Materials of construction

- Body: 304 stainless steel
- Valve sealing anvils: polyphenylene sulfide (PPS)
- Inserts: PEEK (standard, autoclave compatible)

Note: 316L stainless steel is available by special order.

Element materials and specifications

Tubing material	Port ends	Pressure rating
Platinum-cured silicone	Tri-clamp type, molecularly bonded, molded silicone ends with integrated gaskets or 316L stainless steel crimp ends	45 psig line, 30 psig steam
PFL	316 stainless steel crimp ends	60 psig line, 40 psig steam
PCS	Tri-clamp type, molecularly bonded, molded silicone ends with integrated gaskets or 316L stainless steel crimp ends	60 psig line, 40 psig steam

Note: Elements can be cleaned and sterilized by SIP / CIP and autoclave. Element materials are animal free and USP class VI approved

Dimensions (1/8" NPT air inlet)

Tube element size	A	B	C
1/2" (3/8" ID)	3.36	5.18	5.76
3/4" (5/8" ID)	3.90	5.80	6.45
1" (7/8" ID)	4.40	7.94	8.63

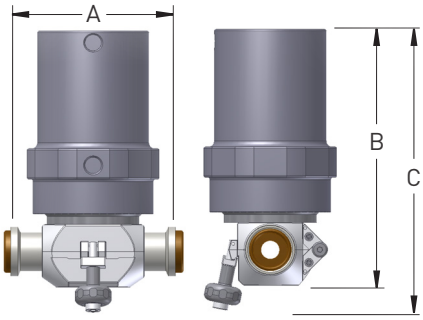

Dimensions

Tube element size	A	B	C
1/2" (3/8" ID)	3.36	3.23	3.81
3/4" (5/8" ID)	3.90	4.07	4.72
1" (7/8" ID)	4.40	5.54	6.23

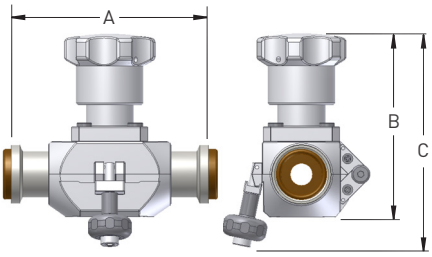

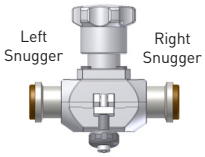

Valve orientation to determine left & right snugger

Certification & Packaging
Each valve element is shipped in sealed bag with a label denoting part number, lot number and description. A certificate of conformance is included with each shipment to certify that each element passes USP Class VI, cytotoxicity, physiochemical and visual inspection tests.

Ordering Information

FFL - ☐ - ☐ - ☐ - ☐ - ☐ - ☐ - ☐

Code	Body Type
QR	Quick Release Body
Blank	Bolted Body

Code	Size
08	1/2"
12	3/4"
16	1"

Code	Body Material
SS	304 Stainless Steel
S6	316 Stainless Steel

Code	Top Works Material & Actuator Style
SAM	304 SS, Autoclaveable, Manual (PEEK)
SSFC	304 SS, Fail Close
SSFO	304 SS, Fail Open

*Contact Parker domnick hunter for high and low pressure options.

Code	Element Material
Blank	None
SI	Silicone
SP	PCS
CS	PFL

*Contact Parker domnick hunter for material availability in specific sizes

Code	Snugger*
Blank	None
B	Both Snuggers
L	Left Snugger
R	Right Snugger

*Only used with continuous tubing elements

Code	Snugger ID
10	5/8"
14	7/8"
20	1 - 1/4"
22	1 - 3/8"

FREE FLOW® Tubing Element Part Numbers

Code	Tubing Element
FFL08SI	1/2" Silicone Valve Element
FFL08SP	1/2" PCS Valve Element
FFL12SI	3/4" Silicone Valve Element
FFL12SP	3/4" PCS Valve Element
FFL16SI	1" Silicone Valve Element
FFL16SP	1" PCS Valve Element

*Contact Parker domnick hunter for PFL options.

Parker domnick hunter has a continuous policy of product development and although the Company reserves the right to change specifications, it attempts to keep customers informed of any alterations. This publication is for general information only and customers are requested to contact our Process Filtration Sales Department for detailed information and advice on a products suitability for specific applications. All products are sold subject to the company's Standard conditions of sale.

Europe: +44 (0)191 4105121 dhprocess@parker.com - North America: +1 608 824 0500 dhpsales.na@parker.com www.parker.com/dhsingleuse

ENERGOEKONOM spol. s r.o., Wolkerova 433, CZ-250 82 Úvaly, Czech Republic, Tel.: +420 281 981 055, info@energoekonom.cz, www.energoekonom.cz

FREE FLOW® Sampling Valves

- Manually actuated parent and child valves
- Multiple ports with smooth flow paths and steam through capability

FREE FLOW® sampling valves from Parker domnick hunter have a standard three port configuration consisting of manually actuated parent and child valves in a stainless steel housing.

The smooth bored tubing element is molded into a seamless T shape to convey fluid through the three ports. Valve sealing anvils along with compression bars control the flow from outside the tubing, never having contact with the media. Quick release hinge technology allows fast element changes without the use of tools.

Each port has a molded tri-clamp end with an integrated gasket to reduce sealing faces and potential contamination. Custom continuous tubing elements are also available.

Manually operated valves are easily actuated by rotating the hand wheel until snug. There is no need for tools. Pneumatically operated valves come ready to connect to an air supply. No field adjustments are necessary.

Note: FREE FLOW® is a registered trademark of Parker Hannifin Corporation.

Features and Benefits

- Quick release, tool free element change out
- Easy to clean, seamless straight through flow path
- Ideal for large volume sampling, additions, and block and bleed applications
- Valve element material is platinum cured silicone
- Completely drainable in any position
- Steam through capability

FREE FLOW® Sampling Valve Tubing Elements

The tube element material is molded into a T configuration providing a seamless fluid path with no areas of entrapment. Custom elements can be molded with a continuous leg for connection to tubing and bag systems.

Parker domnick hunter's FREE FLOW® sampling valves feature quick release hinge technology for fast element changes. It is as simple as loosening the locking screws, unhinging the valve bodies, and removing the tubing element. Then all product contact surfaces can be disposed without the need for cleaning or sanitizing the stainless steel parts.

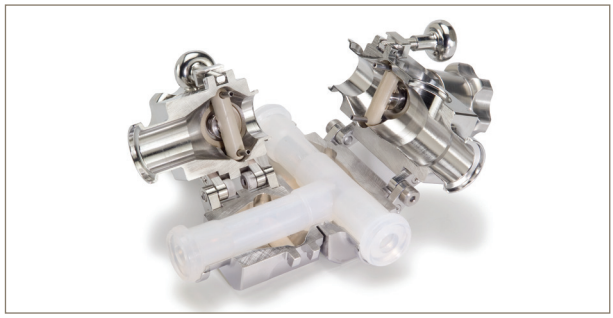

Specifications

FREE FLOW® sampling valves Materials of construction

- Tube element: USP Class VI platinum cured silicone tubing (animal free)
- Body: Metal components are 304 stainless steel*
- Valve sealing anvils: polyphenylene sulfide (PPS)

Note: 316L stainless steel is available by special order.

Element materials and specifications

Tubing material	Port ends	Pressure rating
Platinum-cured silicone	Tri-clamp type, molecularly bonded, molded silicone ends with integrated gaskets	45 psig line, 30 psig steam

Note: Elements can be cleaned and sterilized by SIP / CIP and autoclave. Elements materials are animal free and USP class VI approved.

Dimensions

Tube element size
1/2" (3/8" ID)

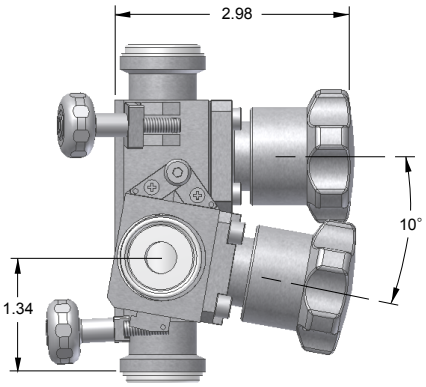

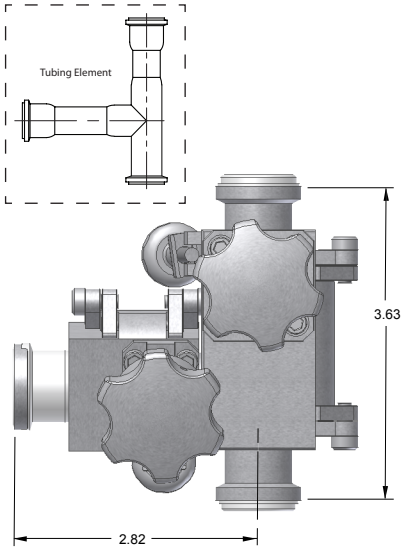

Certification & Packaging
Each valve element is shipped in sealed bag with a label denoting part number, lot number and description. A certificate of conformance is included with each shipment to certify that each element passes USP Class VI, cytotoxicity, physiochemical and visual inspection tests.

Ordering Information

FFLQR2P ☐ - ☐ - ☐ - ☐ - ☐

Code	Child Valve	Code	Size	Code	Body Material	Code	Top Works Material & Actuator Style	Code	Element Material
Blank	None	08	1/2"	SS	304 Stainless Steel	SAM	304 SS, Autoclaveable, Manual (PEEK)	Blank	None
CL	Child Valve			S6	316 Stainless Steel			SI	Silicone

FREE FLOW® Sampling Valve Element Part Number

Code	Tubing Element
FFL2P08SI	1/2" Element Ported FREE FLOW® Valve

Parker domnick hunter has a continuous policy of product development and although the Company reserves the right to change specifications, it attempts to keep customers informed of any alterations. This publication is for general information only and customers are requested to contact our Process Filtration Sales Department for detailed information and advice on a products suitability for specific applications. All products are sold subject to the company's Standard conditions of sale.

Europe: +44 (0)191 4105121 dhprocess@parker.com - North America: +1 608 824 0500 dhpsales.na@parker.com www.parker.com/dhsingleuse

ENERGOEKONOM spol. s r.o., Wolkerova 433, CZ-250 82 Úvaly, Czech Republic, Tel.: +420 281 981 055, info@energoekonom.cz, www.energoekonom.cz

Filter Discs

- liquid filters
- various membrane / media

Process and analytical filter discs from Parker domnick hunter are available in a range of pore size and a choice of five materials.

Membrane discs:
- Cellulose mixed esters
- Polyethersulphone
- Nylon

Fibrous media discs:
- Glass microfibre
- Polypropylene

The discs are supplied interleaved between two protecting layers with the feed surface oriented upwards in the box.

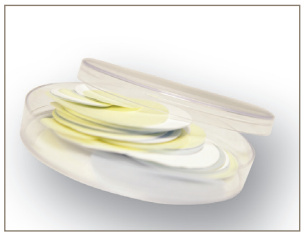

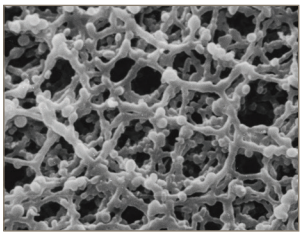

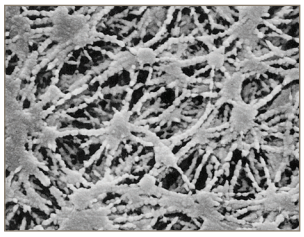

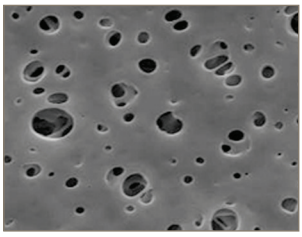

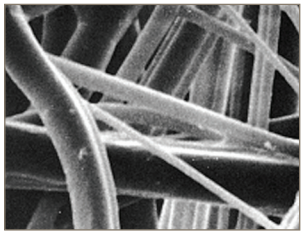

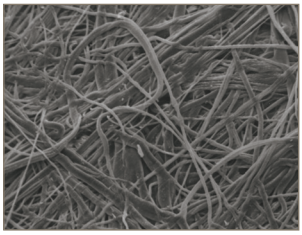

Features and Benefits

- High throughput rates
- Superior flow characteristics
- Easy to handle
- Reduced filtration time
- Low protein binding

Biopharmaceutical Filters

Code	Product
PDGF	PROCLEAR GF
PDGP	PROCLEAR GP
PDPP	PROCLEAR PP
ZDBR	PROPOR BR
ZDHC	PROPOR HC
ZDMR	PROPOR MR
ZDSG	PROPOR SG

Code	Diameter
047	ø47

Product	Code	Micron	Code	Quantity
PROCLEAR GF	96	0.6 µm	Y	50
	01	1.0 µm	Y	50
	02	2.0 µm	Y	50
	05	5.0 µm	Y	50
	07	7.0 µm	Y	50
	10	10.0 µm	Y	50
PROCLEAR GP	95	0.5 µm	Y	50
	96	0.6 µm	Y	50
PROCLEAR PP	96	0.6 µm	Y	50
	01	1.0 µm	Y	50
	03	3.0 µm	Y	50
	05	5.0 µm	Y	50
	07	7.0 µm	Y	50
	10	10.0 µm	Y	50
	15	15.0 µm	Y	50
	20	20.0 µm	Y	50
	25	25.0 µm	Y	50
	40	40.0 µm	Y	50
	55	55.0 µm	Y	50
	75	75.0 µm	Y	50
	100	100.0 µm	Y	50
PROPOR BR	020	0.20 µm	Y	50
PROPOR HC	620	0.20 µm	Y	50
PROPOR MR	610	0.1 µm	Y	50
PROPOR SG	010	0.10 µm	Z	100
	020	0.20 µm	Z	100
	045	0.45 µm	Z	100

Standard diameters 047 mm.
Diameters 025mm, 090 mm & 142 mm are also available.
For full ordering information, variants, quantities and availability, please contact Parker domnick hunter.

Europe: +44 (0)191 4105121 dhprocess@parker.com - North America: +1 608 824 0500 dhpsales.na@parker.com www.parker.com/dhpharma

Parker domnick hunter has a continuous policy of product development and although the Company reserves the right to change specifications, it attempts to keep customers informed of any alterations. This publication is for general information only and customers are requested to contact our Process Filtration Sales Department for detailed information and advice on a products suitability for specific applications. All products are sold subject to the company's Standard conditions of sale.

ENERGOEKONOM spol. s r.o., Wolkerova 433, CZ-250 82 Úvaly, Czech Republic, Tel.: +420 281 981 055, info@energoekonom.cz, www.energoekonom.cz

HIGH FLOW PREPOR GFA Filters

- air / gas filters
- glass microfibre

HIGH FLOW PREPOR GFA is a high capacity glass fibre prefilter specifically designed for the removal of bulk particulate from compressed air and gases.

It is used extensively for prefiltration duties in dry compressed air systems and provides excellent protection for final sterile filters.

HIGH FLOW PREPOR GFA utilizes pleated glass fibre filter media encased within an upstream and downstream expanded polypropylene mesh filter support. The pleat pack is supported by an inner stainless steel core and outer heat stabilized polypropylene cage, heat bonded to heat stabilized polypropylene end caps.

The combination of high voids volume filter media and pleated construction results in a filter cartridge with exceptional dirt holding capacity, able to operate at very low differential pressures.

Note: PREPOR is a registered trademark of Parker Hannifin Corporation.

Features and Benefits

- High surface area and voids volume filter media
- Exceptionally high flow rates with low pressure drops
- Reliable efficient protection of final sterilization filters
- Heat stabilized componentry to allow operation at elevated temperatures

Performance Characteristics

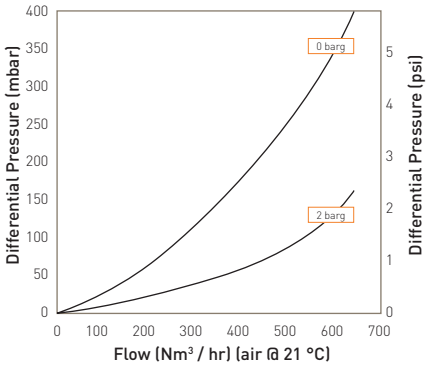

Cartridge flow rates
10" Size (250 mm)

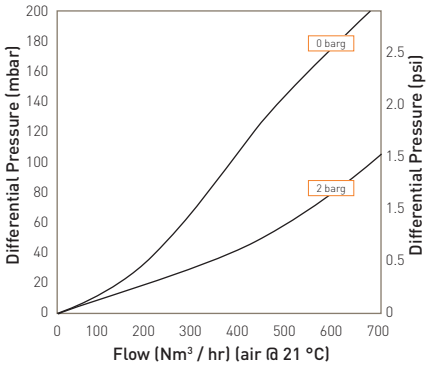

Cartridge flow rates
20" Size (500 mm)

Specifications

Materials of Construction

- Filtration Media: Glass Microfibre
- Upstream Support: Polypropylene
- Downstream Support: Polypropylene
- Inner Support Core: 316L Stainless Steel
- Outer Protection Cage: Polypropylene
- End Caps: Polypropylene
- End Cap Insert: Stainless Steel
- Standard o-rings/gaskets: Silicone

Biological Safety

Materials conform to the relevant requirements of 21CFR Part 177, EC1935 / 2004 and current USP Plastics Class VI - 121 °C and ISO10993 equivalents.

Recommended Operating Conditions

The maximum differential pressure in direction of flow (outside to in) is 3.5 barg (50.76 psig) at 20 °C (68 °F).

The maximum recommended continuous operating temperature is 70 °C (158 °F).

Note: For temperatures from 70 °C (158 °F) to 100 °C (212 °F) a special product with polyester supports is available.

Effective Filtration Area (EFA)

10" (250 mm) 0.48 m^2 (5.16 ft^2)

Ordering Information

ZCHP □ - □ □ - □

Code	Length (Nominal)	
1	10"	(250 mm)
2	20"	(500 mm)
3	30"	(750 mm)

Code	Micron
1.0	1.0 µm

Code	Endcap (10")
C	BF / 226 Bayonet
P	BIO-X Retrofit

Code	O-rings
E	EPDM
S	Silicone
V	Viton

Code	Variant*
S4*	High Temperature

** Only available with Silicone o-rings.*

Europe: +44 (0)191 4105121 dhprocess@parker.com - North America: +1 608 824 0500 dhpsales.na@parker.com www.parker.com/dhpharma

Parker domnick hunter has a continuous policy of product development and although the Company reserves the right to change specifications, it attempts to keep customers informed of any alterations. This publication is for general information only and customers are requested to contact our Process Filtration Sales Department for detailed information and advice on a products suitability for specific applications. All products are sold subject to the company's Standard conditions of sale.

ENERGOEKONOM spol. s r.o., Wolkerova 433, CZ-250 82 Úvaly, Czech Republic, Tel.: +420 281 981 055, info@energoekonom.cz, www.energoekonom.cz

PEPLYN AIR Filters

- air / gas filters
- meltblown polypropylene

PEPLYN AIR filter cartridges have been specifically designed to guarantee removal of particulate from gas streams.

They can be used to protect sterilizing grade filters in pressurized systems or in exhaust gas vent applications.

PEPLYN AIR is particularly suitable for:

- Inlet gas in the fermentation industry as protection to sterilizing grade filters where polypropylene media is preferred
- As protection to sterilizing grade filters in exhaust gas systems
- Vent applications
- Systems where high particulate loading is expected

PEPLYN AIR has the ability to be steam sterilized and has a broad range of chemical compatibility

Note: PEPLYN is a registered trademark of Parker Hannifin Corporation.

Features and Benefits

- Cost-effective prefiltration
- Absolute micron rating range from 1.0 - 25 micron
- High flow rates and long life
- Steam sterilizable
- Graded density for excellent particle retention
- No release of particles even during system pressure fluctuations

Performance Characteristics

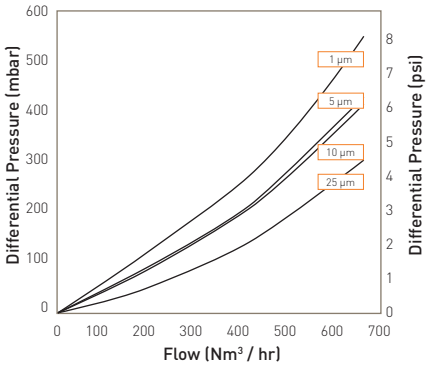

Flow rates for other sizes available upon request

Cartridge flow rates @ 0 barg
10" Size (250 mm)

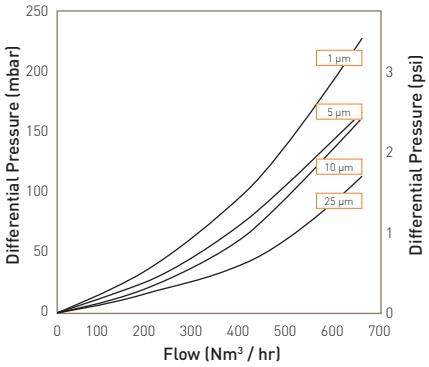

Flow rates for other sizes available upon request

Cartridge flow rates @ 2 barg
10" Size (250 mm)

Specifications

Materials of Construction

- Filtration Media: Meltblown Polypropylene
- Upstream Support: Polypropylene
- Downstream Support: Polypropylene
- Inner Support Core: 316L Stainless Steel
- Outer Protection Cage: Polypropylene
- End Caps: Polypropylene
- Standard o-rings/gaskets: Silicone

Biological Safety

Materials conform to the relevant requirements of 21CFR Part 177 and current USP Plastics Class VI - 121 °C and ISO10993 equivalents.

Recommended Operating Conditions

The maximum differential pressure in direction of flow (outside to in) is 3.5 barg (50.76 psig) at 20 °C (68 °F).

The maximum recommended continuous operating temperature is 50 °C (122 °F).

Effective Filtration Area (EFA)*

10" (250 mm) 0.49 m^2 (5.27 ft^2)

**Varies with micron rating*

Cleaning and Sterilization

PEPLYN AIR cartridges can be repeatedly in situ steam sterilized or autoclaved up to 142 °C (287.6 °F).

Determination of Micron Ratings

Particle removal efficiencies of PEPLYN AIR cartridges have been determined independently by challenging with a cut silica test dust, generated by BUS1701 dust injector used in conjunction with laser particle counters.

Micron Efficiency Ratings

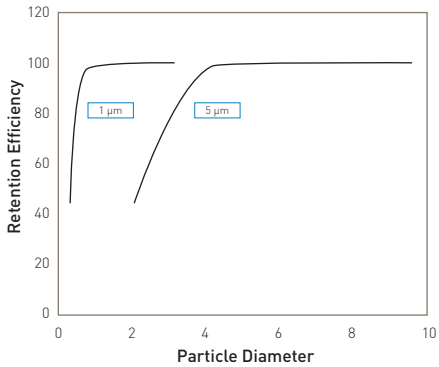

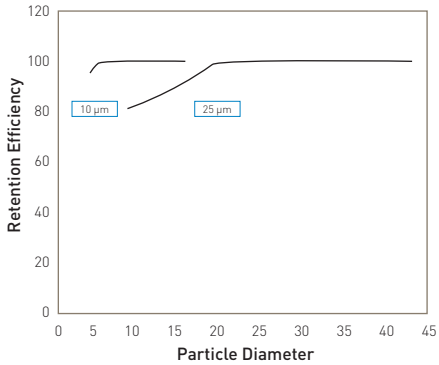

Ordering Information

ZCPH [ ] - [ ] [ ] - [ ]

Code	Length (Nominal)	
B*	2.5"	(65 mm)
A*	5"	(125 mm)
K	5"	(125 mm)
1	10"	(250 mm)
2	20"	(500 mm)
3	30"	(750 mm)

** Supplied in Packs of 3.*

Code	Micron	
1.0	1.0	µm
005	5.0	µm
010	10.0	µm
025	25.0	µm

Code	Endcap (10")
C	BF / 226 Bayonet
H	UF Retrofit

Code	Endcap (Demi)
T	TRUESEAL
Y	Demi Stub
Z	Demi A & B Std

Code	O-rings
E	EPDM
P	PTFE Encapsulated Silicone
S*	Silicone
V	Viton

** Silicone o-ring supplied as standard without having to specify the 'S' code.*

Parker domnick hunter has a continuous policy of product development and although the Company reserves the right to change specifications, it attempts to keep customers informed of any alterations. This publication is for general information only and customers are requested to contact our Process Filtration Sales Department for detailed information and advice on a products suitability for specific applications. All products are sold subject to the company's Standard conditions of sale.

Europe: +44 (0)191 4105121 dhprocess@parker.com - North America: +1 608 824 0500 dhpsales.na@parker.com www.parker.com/dhpharma

ENERGOEKONOM spol. s r.o., Wolkerova 433, CZ-250 82 Úvaly, Czech Republic, Tel.: +420 281 981 055, info@energoekonom.cz, www.energoekonom.cz

HIGH FLOW BIO-X Filters

- air / gas filters
- PTFE impregnated borosilicate microfibre

HIGH FLOW BIO-X combines proven depth filter technology and a pleated construction to provide retention down to 0.01 micron in gas.

Flow rates typically 2-3 times that of membrane filters make HIGH FLOW BIO-X the filter that can dramatically reduce cartridge usage and installation size within the fermentation, food and beverage industries.

The specially developed PTFE impregnation process imparts greater strength and permanent hydrophobicity to the borosilicate microfibre media. This leads to excellent performance in applications such as the provision of sterile gas in filling machines.

Note: BIO-X is a registered trademark of Parker Hannifin Corporation.

Features and Benefits

- 94% voids volume PTFE impregnated microfibre
- Wide bore cartridge construction to maximize flow rate
- Stainless steel inner core
- Exceptionally high flow rates with low pressure drops
- Fully validated by aerosolized bacterial and viral challenge

Performance Characteristics

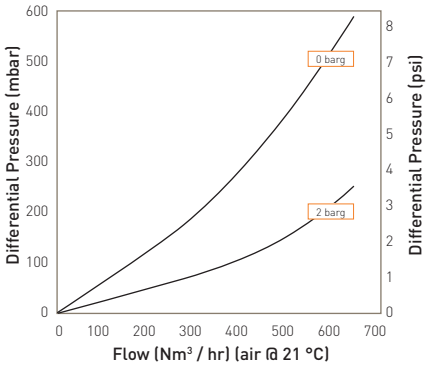

Flow rates for other sizes available upon request

10¨ Size (250 mm) Cartridge

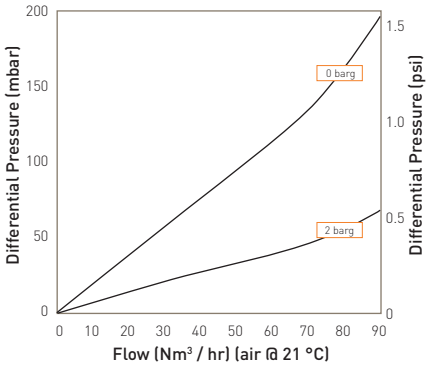

Flow rates for other sizes available upon request

A Size (125 mm) Cartridge

Specifications

Materials of Construction

- Filtration Media: PTFE Impregnated Borosilicate Microfibre
- Upstream Support: Polypropylene
- Downstream Support: Polypropylene
- Inner Support Core: 316L Stainless Steel
- Outer Protection Cage: Polypropylene
- End Caps: Encapsulated Polyethersulphone
- End Cap Insert: 316L Stainless Steel
- Standard o-rings/gaskets: Silicone

Biological Safety

Materials conform to the relevant requirements of 21CFR Part 177, EC1935 / 2004 and current USP Plastics Class VI - 121 °C and ISO10993 equivalents.

Recommended Operating Conditions

The maximum differential pressure in direction of flow (outside to in) is 3.5 barg (50.76 psig) at 70 °C (158 °F).

The maximum recommended continuous operating temperature is 70 °C (158 °F).

Effective Filtration Area (EFA)

10" (250 mm) 0.38 m^2 (4.09 ft^2)

Sterilization

HIGH FLOW BIO-X cartridges can be in situ steam sterilized or autoclaved up to 142 °C (287.6 °F) for a maximum of 150 steam cycles.

Retention Characteristics

The HIGH FLOW BIO-X range of cartridges has been fully validated by aerosol bacterial challenge levels of 10^{12} *Brevundimonas diminuta* per 10" (250 mm) filter cartridge. Independent test work also shows full retention to *MS-2 Coliphage*.

Integrity Test Data

All cartridges are integrity tested prior to despatch by the aerosol challenge test method using the Parker domnick hunter VALAIRDATA II.

Ordering Information

ZCHB - □ □ - □

Code	Length (Nominal)	
B*	2.5"	(65 mm)
A*	5"	(125 mm)
K	5"	(125 mm)
1	10"	(250 mm)
2	20"	(500 mm)
3	30"	(750 mm)

** Supplied in packs of 3.*

Code	Endcap (10")
C	P-7
P	BIO-X Retrofit
H	UF Retrofit

Code	Endcap (Demi)
H	UF Retrofit
T	TRUESEAL
Y	Demi MCY
Z	Demi A & B Std

Code	O-rings
E	EPDM
S*	Silicone
V	Viton

** Silicone o-ring supplied as standard without having to specify the 'S' code.*

Europe: +44 (0)191 4105121 dhprocess@parker.com - North America: +1 608 824 0500 dhpsales.na@parker.com www.parker.com/dhpharma

Parker domnick hunter has a continuous policy of product development and although the Company reserves the right to change specifications, it attempts to keep customers informed of any alterations. This publication is for general information only and customers are requested to contact our Process Filtration Sales Department for detailed information and advice on a products suitability for specific applications. All products are sold subject to the company's Standard conditions of sale.

ENERGOEKONOM spol. s r.o., Wolkerova 433, CZ-250 82 Úvaly, Czech Republic, Tel.: +420 281 981 055, info@energoekonom.cz, www.energoekonom.cz

HIGH FLOW TETPOR II Filters

- air / gas filters
- expanded PTFE

HIGH FLOW TETPOR II gas sterilization filters have been developed to benefit from technological advances within the manufacture of PTFE membranes. This new generation of filter sets the standard with an unrivalled combination of efficiency, flow rate and strength.

The HIGH FLOW TETPOR II is validated as a 0.2 micron sterilizing grade filter in liquids through ASTM F838-05 in gas through full retention to an aerosol challenge of MS2 phage. This ensures the filter will guarantee the sterility of your process in the worst-case scenario where the filter may be subjected to bulk liquid due to a process problem. Subtle changes to the structure of the hydrophobic PTFE have also resulted in the production of an extremely robust product now validated for 225 steam sterilization cycles @ 142 °C (287.6 °F). The combination of non-woven supports upstream of the membrane and an expanded net layer downstream has significant benefits. It provides increased protection and service life while guaranteeing zero fibre shedding into the process.

HIGH FLOW TETPOR II is suitable for all sterile gas applications including fermentation inlet and off gas streams, venting, lyophilisers, autoclave vacuum breaks and blow-fill-seal equipment as well as the provision of particle free air within the electronics industry.

Note: TETPOR is a registered trademark of Parker Hannifin Corporation.

Features and Benefits

- Optimum pleat configuration
- Steam sterilizable up to 225 cycles at 142 °C (287.6 °F)
- Unrivalled flow rates combined with low pressure drops
- Fully validated to ASTM 838-05 for liquid bacterial challenge
- Fully validated to aerosol and viral challenge
- Integrity testable by all methods including water intrusion test

Performance Characteristics

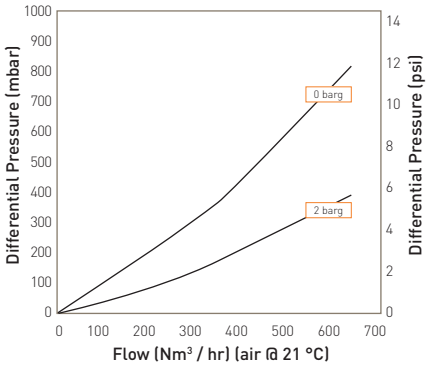

Flow rates for other sizes available upon request

10¨ Size (250 mm) Cartridge

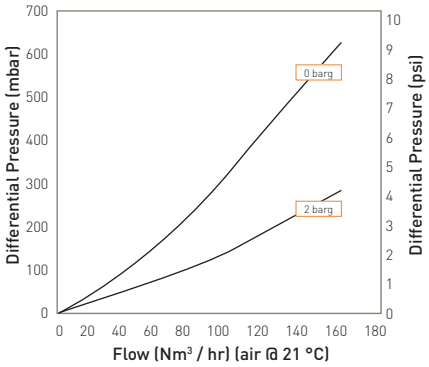

Flow rates for other sizes available upon request

A Size (125 mm) Cartridge

Specifications

Materials of Construction

- Filtration Membrane: Expanded PTFE
- Upstream Support: Polypropylene
- Downstream Support: Polypropylene
- Inner Support Core: 316L Stainless Steel
- Outer Protection Cage: Polypropylene
- End Caps: Polypropylene
- End Cap Insert: Polysulphone
- Standard o-rings: Silicone

Biological Safety

Materials conform to the relevant requirements of 21CFR Part 177, EC1935 / 2004 and current USP Plastics Class VI - 121 °C and ISO10993 equivalents.

Recommended Operating Conditions

The maximum differential pressure in direction of flow (outside to in) is 3.5 barg (50.76 psig) at 60 °C (140 °F).

The maximum recommended continuous inlet air temperature is 60 °C (140 °F).

Note: HIGH FLOW TETPOR II cartridges can be used as WFI vents in heated housings if changed on a 4-6 monthly basis.

Sterilization

HIGH FLOW TETPOR II cartridges can be in situ steam sterilized for up to 225 cycles at 142 °C (287.6 °F).

Retention Characteristics

HIGH FLOW TETPOR II cartridges have been fully validated as 0.2 micron sterilizing grade filter cartridges, for compressed air and gas applications. They exceed liquid bacterial challenge levels as recommended by ASTM+. In addition, HIGH FLOW TETPOR II is also validated by aerosol bacterial and *MS-2 Coliphage* challenge testing.

+ASTM American Society for Testing and Materials

Integrity Test Data

All cartridges are integrity tested prior to despatch by the pressure decay and aerosol challenge test methods. Values are for cartridges wetted with 60 / 40 IPA / Water.

Cartridge	Test Pressure (bar)	Test Pressure (psi)	Diffusional Flow (ml / min)	Water Intrusion Test Pressure (barg)	Water Intrusion Test Pressure (psig)	Water Intrusion (ml / 10 min)	Water Flow (µl / 10 min)
D	0.8	11.6	0.6	2.5	36.2	N / A	N / A
C	0.8	11.6	1.1	2.5	36.2	N / A	N / A
B	0.8	11.6	2.8	2.5	36.2	2.3	657
A	0.8	11.6	5.6	2.5	36.2	4.6	1314
K	0.8	11.6	7.70	2.5	36.2	6.4	1828
10"	0.8	11.6	16.50	2.5	36.2	13.5	3857
20"	0.8	11.6	33.00	2.5	36.2	27.0	7714
30"	0.8	11.6	49.50	2.5	36.2	40.5	11571

Ordering Information

ZHFT / □ □ - □

Code	Length (Nominal)	
D*	1.5"	(35 mm)
C*	2.5"	(65 mm)
B*	2.5"	(65 mm)
A*	5"	(125 mm)
K	5"	(125 mm)
1	10"	(250 mm)
2	20"	(500 mm)
3	30"	(750 mm)

** Supplied in packs of 3.*

Code	Endcap (10")
C	P-7
P	BIO-X Retrofit
H	UF Retrofit

Code	Endcap (Demi)
H	UF Retrofit
T	TRUESEAL
W	HF Demi C & D
Y	Demi MCY
Z	Demi A & B Std

Code	O-rings
E	EPDM
P+	PTFE Encapsulated Silicone
S*	Silicone
V	Viton

+ Not available on C and D length variants.
**Silicone o-ring supplied as standard without having to specify the 'S' code.*

Parker domnick hunter has a continuous policy of product development and although the Company reserves the right to change specifications, it attempts to keep customers informed of any alterations. This publication is for general information only and customers are requested to contact our Process Filtration Sales Department for detailed information and advice on a products suitability for specific applications. All products are sold subject to the company's Standard conditions of sale.

Europe: +44 (0)191 4105121 dhprocess@parker.com - North America: +1 608 824 0500 dhpsales.na@parker.com www.parker.com/dhpharma

ENERGOEKONOM spol. s r.o., Wolkerova 433, CZ-250 82 Úvaly, Czech Republic, Tel.: +420 281 981 055, info@energoekonom.cz, www.energoekonom.cz

HF TETPOR H.T. Filters

- air / gas filters
- expanded PTFE

HIGH FLOW TETPOR H.T. gas sterilization filter cartridges provide unrivalled performance in process industry applications where continuous cartridge operation of up to 100 °C (212 °F) is a requirement.

Applications include specific biological fermentations which use high inlet air temperatures and heated vent filters on storage tanks whose contents are at elevated temperatures >80 °C (176 °F), e.g. WFI tanks.

HIGH FLOW TETPOR H.T. cartridges utilize a proven inherently hydrophobic, expanded PTFE membrane validated as sterilizing grade in liquid in accordance with ASTM F838-05. This ensures the removal of all airborne bacteria, viruses and bacteriophage. Polyaramid membrane support layers facilitate continuous operation at temperatures up to 100 °C (212 °F).

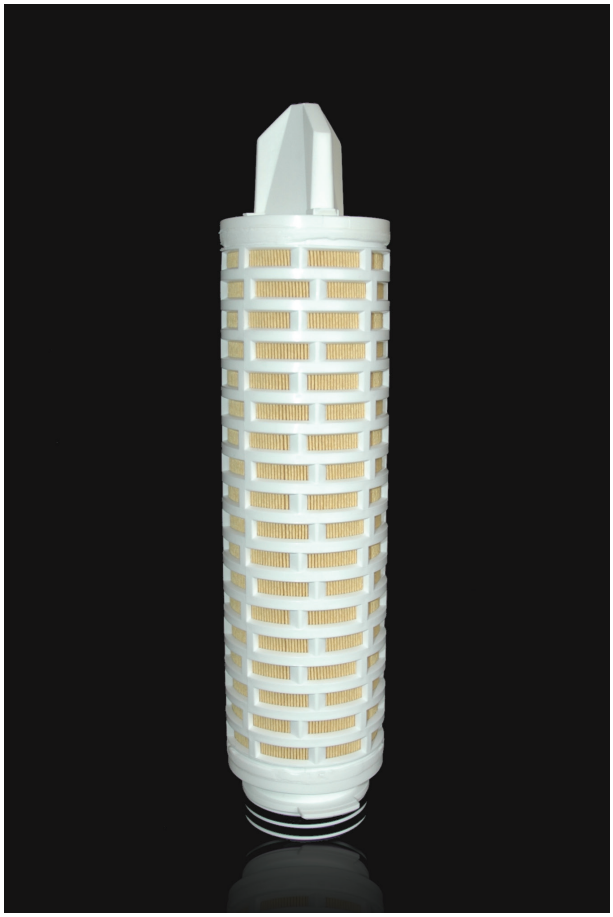

Note: TETPOR is a registered trademark of Parker Hannifin Corporation.

Features and Benefits

- Long service life even at elevated temperatures 100 °C (212 °F)
- Assured biosecurity with absolute rated filtration
- Stainless steel inner core
- Steam sterilizable to 142 °C (287 °F)
- Exceptionally high flow rates with low pressure drops

Performance Characteristics

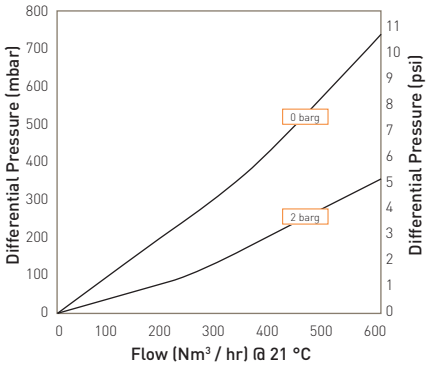

10" Size (250 mm) Cartridge

Specifications

Materials of Construction

- Filtration Membrane: Expanded PTFE
- Upstream Support: Polyaramid
- Downstream Support: Polyaramid
- Inner Support Core: 316L Stainless Steel
- Outer Protection Cage: Heat Stabilized Polypropylene
- End Caps: Heat Stabilized Polypropylene
- End Cap Insert: Stainless Steel
- Standard o-rings: Silicone

Biological Safety

Materials conform to current USP Plastics Class VI - 121 °C and ISO10993 equivalents.

Recommended Operating Conditions

The maximum differential pressure in direction of flow (outside to in) is 3.0 barg (43.51 psig) at 90 °C (194 °F).

The maximum recommended continuous operating temperature is 100 °C (212 °F).

Effective Filtration Area (EFA)

10" (250 mm) 0.9 m^2 (9.8 ft^2)

Sterilization

HIGH FLOW TETPOR H.T. cartridges can be in situ steam sterilized for up to 120 cycles at 142 °C (287.6 °F).

Retention Characteristics

HIGH FLOW TETPOR H.T. cartridges have been fully validated as sterilizing grade filter cartridges, for compressed air and gas applications. They exceed liquid bacterial challenge levels as recommended by ASTM+. In addition, HIGH FLOW TETPOR H.T. is further validated by aerosol bacterial challenge testing.

+ASTM American Society for Testing and Materials

Integrity Test Data

All cartridges are integrity tested prior to despatch by the pressure decay and aerosol challenge test methods. Values are for cartridges wetted with 60 / 40 IPA / Water.

Micron Rating		0.2
Diffusional Flow Test Pressure	(barg)	0.80
	(psig)	11.6
Minimum Bubble Point	(barg)	1.00
	(psig)	14.5
Max. Diffusional Flow (10") (ml / min)		16.0

Ordering Information

ZCHT / [ ] [ ] - [ ] [ ]

Code	Length (Nominal)	
1	10"	(250 mm)
2	20"	(500 mm)
3	30"	(750 mm)

Code	Endcap (10")
C	BF / 226 Bayonet
P	BIO-X Retrofit

Code	Variant
N	High temperature

Code	O-rings
E	EPDM
P	PTFE Encapsulated Silicone
S*	Silicone
V	Viton

**Silicone o-ring supplied as standard without having to specify the 'S' code.*

Parker domnick hunter has a continuous policy of product development and although the Company reserves the right to change specifications, it attempts to keep customers informed of any alterations. This publication is for general information only and customers are requested to contact our Process Filtration Sales Department for detailed information and advice on a products suitability for specific applications. All products are sold subject to the company's Standard conditions of sale.

Europe: +44 (0)191 4105121 dhprocess@parker.com - North America: +1 608 824 0500 dhpsales.na@parker.com www.parker.com/dhpharma

ENERGOEKONOM spol. s r.o., Wolkerova 433, CZ-250 82 Úvaly, Czech Republic, Tel.: +420 281 981 055, info@energoekonom.cz, www.energoekonom.cz

TETPOR AIR Filters

- air / gas filters
- expanded PTFE

TETPOR AIR sterilization filter cartridges offer exceptional filtration performance while providing the highest levels of biosecurity throughout the process industry.

Operating at ambient temperature conditions, TETPOR AIR filter cartridges provide a cost-effective filtration solution. A unique polypropylene prefilter layer extends service life in heavily contaminated environments.

TETPOR AIR filter cartridges also utilize a well-proven, inherently hydrophobic expanded PTFE membrane validated as sterilizing grade in liquid in accordance with Current ASTM F838 methodology.
This ensures the removal of all airborne bacteria, viruses and bacteriophage.

Note: TETPOR is a registered trademark of Parker Hannifin Corporation.

Features and Benefits

- Assured biosecurity with absolute rated filtration
- High flow rates with low pressure drops
- High voids volume PTFE membrane
- Steam sterilizable to 142 °C (287.6 °F)
- Unique prefilter layer

Performance Characteristics

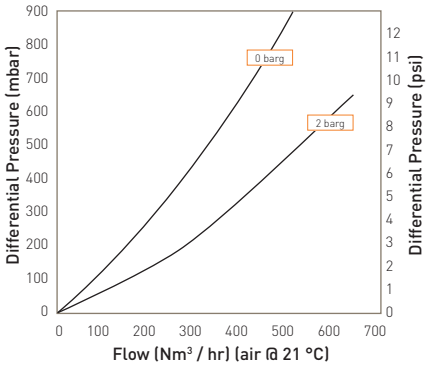

10¨ Size (250 mm) Cartridge

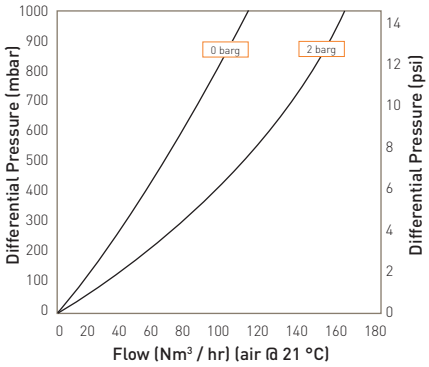

B Size (65 mm) Cartridge

Specifications

Materials of Construction

- Filtration Membrane: Expanded PTFE
- Upstream Support: Polypropylene
- Downstream Support: Polypropylene

Filter Cartridges

- Inner Support Core: Polypropylene
- Outer Protection Cage: Polypropylene
- End Caps: Polypropylene
- End Caps Insert: 316L Stainless Steel
- Standard o-rings/gaskets: Silicone

MURUS Disposable Filter Capsules

- Core: Polypropylene
- Sleeve: Polypropylene
- Standard o-rings: Viton
- Capsule Body: Polypropylene
- Capsules Vent Seals: Silicone

DEMICAP Filter Capsules

- Core: Polypropylene
- Sleeve: Polypropylene
- End Caps: Polypropylene
- Capsule Body: Polypropylene
- Capsules Vent Seals: Silicone
- Filling Bell: Polycarbonate

Syringe Filters

- Body: Polypropylene

Recommended Operating Conditions

Filter Cartridges

Up to 60 °C (140 °F) continuous operating temperature and higher short-term temperatures during CIP to the following limits:

Temperature °C	Temperature °F	Max. Forward dP (bar)	Max. Forward dP (psi)
20	68	5.0	72.5
40	104	4.0	58.0
60	140	3.0	43.5
80	176	2.0	29.0
90	194	1.7	24.6

MURUS Disposable Filter Capsules

Up to 25 °C (77 °F) @ 5.5 barg (79.7 psig)
Up to 60 °C (140 °F) @ 2.8 barg (40.6 psig)

Parker Hannifin certify that this product complies with the current European Council Pressure Equipment Directive (PED) - Sound Engineering Practice (SEP). This product is intended for use with Group 1 & 2 Dangerous and Harmless Liquids and Group 2 Harmless Gases at the operating conditions stated in this document. The Pressure Equipment Directive mandates that category SEP product cannot bear the CE mark.

DEMICAP Filter Capsules

Up to 40 °C (104 °F) at line pressures up to 5.0 barg (72 psig).

Effective Filtration Area (EFA)

10" (250 mm):	0.77 m^2	(8.28 ft^2)
K Size:	0.36 m^2	(3.87 ft^2)
A Size:	0.25 m^2	(2.69 ft^2)
B Size:	0.12 m^2	(1.29 ft^2)
E Size:	0.06 m^2	(0.64 ft^2)
Syringe ø50 mm:	14.50 cm^2	(2.25 in^2)

	Autoclave Cycles	Autoclave Temp	Steam-in-Place Cycles (30 min.)	Steam-in-Place Temp
Cartridges	120	142 °C (287.6 °F)	120	142 °C (287.6 °F)
MURUS	5	130 °C (266 °F)	-	-
DEMICAP	100	135 °C (275 °F)	-	-
Syringe	1	130 °C (266 °F)	-	-

Sterilization

For detailed operational procedures and advice on cleaning and sterilization, please contact the Technical Support Group through your usual Parker domnick hunter contact.

Biological Safety

Materials conform to the relevant requirements of 21CFR Part 177 and current USP Plastics Class VI - 121 °C and ISO10993 equivalents.

Quality Standards

Pharmaceutical grade products are manufactured in accordance with cGMP, 100% flushed with pharmaceutical grade purified water and integrity tested prior to despatch. A sample of each lot is tested to demonstrate conformity to validated claims.

Performance Characteristics

TOC / Conductivity
The filtrate quality from a 10¨ (250 mm) TETPOR AIR conforms to the requirements of current USP <643> (TOC) and USP <645> (conductivity).

Endotoxins
Aqueous extracts from the 10¨ (250 mm) TETPOR AIR contain < 0.25 EU / ml when tested in accordance with the Limulus Amoebocyte Lysate test.

Non-Volatile Extractables (NVE)
Total NVEs extracted in the first 5 litre flush of purified water for a 10¨ (250 mm) cartridge are <5 mg.

Pharmaceutical Validation
A full validation guide is available upon request from Laboratory Services Group (LSG).

Oxidizable Substances
TETPOR AIR filter cartridges meet current USP and EP quality standards for sterile purified water for oxidizable substances following a <1 litre water flush.

Integrity Test Data
All filters are integrity testable to the following limits when wet with 60 / 40 : IPA /water and using air as the test gas.

Cartridge	Test Pressure		Diffusional Flow	Water Intrusion Test Pressure		Water Intrusion	Water Flow
	(barg)	(psig)	(ml / min)	(barg)	(psig)	(ml / 10 min)	(µl / 10 min)
E	0.8	11.6	1.5	2.5	36.3	1.3	371
B	0.8	11.6	3.0	2.5	36.3	2.6	742
A	0.8	11.6	6.0	2.5	36.3	5.3	1514
K	0.8	11.6	8.3	2.5	36.3	7.2	2060
10¨	0.8	11.6	17.7	2.5	36.3	15.3	4370

Retention Characteristics
TETPOR AIR filter cartridges are validated by bacterial challenge testing with *Brevundimonas diminuta* to current ASTM F838 methodology (10^7 organisms / cm^2 EFA minimum) with typical in-house challenge levels being 10^{11} organisms per 10¨ (250 mm) filter cartridge.

Ordering Information

Cartridges

ZCMT [ ] / [ ] [ ] - [ ] [ ]

Code	Length (Nominal)
B*	2.5" (65 mm)
A*	5" (125 mm)
K	5" (125 mm)
1	10" (250 mm)
2	20" (500 mm)
3	30" (750 mm)

*Supplied in packs of 3.

Code	Micron
020	0.2 µm

Code	Endcap (10")
B*	dh DOE
C	BF / 226 Bayonet
D	Fin / 222
E	Flat Top / 222
F	BF / 216/218
G	Recess / 222
H	UF Retrofit
R	BF / 222 Bayonet

*EPDM gaskets supplied as standard.

Code	Endcap (Demi)
SK	Retrofit
T	TRUESEAL
X	116
Y	Demi Stub
Z	Demi A & B Std

Code	Variant
A	Air / Gas

Code	O-rings
E	EPDM
P	PTFE Encapsulated Silicone
S*	Silicone
V	Viton

*Silicone o-ring supplied as standard without having to specify the 'S' code.

MURUS Capsules

ZLMT [ ] - [ ] [ ] [ ] - [ ] [ ] [ ] - [ ]

Code	Length (Nominal)
K	5" (125 mm)
1	10" (250 mm)
2	20" (500 mm)
3	30" (750 mm)

Code	Micron
020	0.2 µm

Code	Inlet Connection
A	3/4" Tri-Clamp
B	1 1/2" Tri-Clamp
D	1" Hosebarb
T	1" Tri-Clamp

Code	Outlet Connection
A	3/4" Tri-Clamp
B	1 1/2" Tri-Clamp
D	1" Hosebarb
T	1" Tri-Clamp

Code	Variant
A	Air / Gas

Code	Grade
N	Non-sterile

Code	Design
L	In-Line
T*	T-Port

*Only available with a 1" Tri-Clamp.

Code	O-rings
E	EPDM
S*	Silicone
V	Viton

*Silicone o-ring supplied as standard without having to specify the 'S' code.

DEMICAP Capsules

ZEMT [ ] - [ ] [ ] [ ] - [ ] [ ] [ ]

Code	Length (Nominal)
E	4.4" (113 mm)
B	5.5" (140 mm)
A	7.9" (200 mm)

Code	Micron
020	0.2 µm

Code	Inlet Connection
T	1" Tri-Clamp
N	1/2" NPT Male
H	1/2" Hosebarb
G	Stepped Hosebarb
M	1/4" NPT Male
Q	Walther QC
R	Grommel / QC
V	3/8" NPT Female

Code	Outlet Connection
T	1" Tri-Clamp
N	1/2" NPT Male
H	1/2" Hosebarb
G	Stepped Hosebarb
M	1/4" NPT Male
Q	Walther QC
R	Grommel / QC
V	3/8" NPT Female

Code	Variant
A	Air / Gas

Code	Grade
N	Non-Sterile

Code	Pack N°
3	Pack of 3

Syringe Filters

ZSMT [ ] - [ ] [ ] [ ] - [ ] [ ] [ ] [ ]

Code	Diameter
050	50 mm

Code	Micron
020	0.2 µm

Code	Inlet Connection
G	Stepped Hosebarb
L	1/8" NPT Male

Code	Outlet Connection
G	Stepped Hosebarb
L	1/8" NPT Male

Code	Variant
P	Pharmaceutical

Code	Grade
N	Non-sterile

Code	Options
S	Standard

Code	Pack N°
025	25 per box

Parker domnick hunter has a continuous policy of product development and although the Company reserves the right to change specifications, it attempts to keep customers informed of any alterations. This publication is for general information only and customers are requested to contact our Process Filtration Sales Department for detailed information and advice on a products suitability for specific applications. All products are sold subject to the company's Standard conditions of sale.

Europe: +44 (0)191 4105121 dhprocess@parker.com - North America: +1 608 824 0500 dhpsales.na@parker.com www.parker.com/dhpharma

ENERGOEKONOM spol. s r.o., Wolkerova 433, CZ-250 82 Úvaly, Czech Republic, Tel.: +420 281 981 055, info@energoekonom.cz, www.energoekonom.cz

Bag Filters

- mixed media, mesh and felt

Parker domnick hunter's range of bag filters are manufactured from a variety of filter media each specifically chosen for its compatibility with a wide range of process liquids. Parker bag filters are of a fully welded design rather than sewn. No process liquid can bypass through needle holes caused by the sewing process or around a sewn ring. Parker domnick hunter's range of filter bags include:

Standard filter bags
Available in polypropylene, polyester and nylon from 1 to 1000µm.

Extended life bags
Increased thickness of the filter media can increase lifetime by up to 5 times that of a standard bag.

The filtration mechanism employed within filter bags allows high flow rates and high dirt holding capacity, this combined with low maintenance cost and quick change-out makes bag filtration an extremely cost effective means of liquid filtration. Bags are available to suit most common filter housings.

Features and Benefits

- From 1 to 1000 microns
- Low maintenance costs and quick change-out

Performance Characteristics

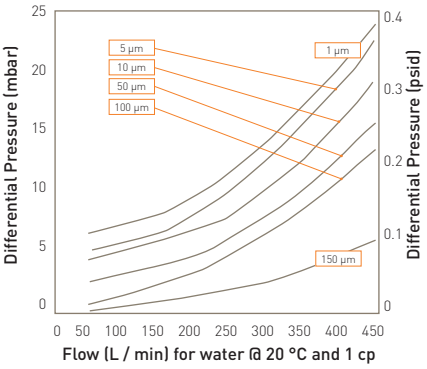

For double length bags multiply flow rate by 2.1
For triple length by 3.2

Felt Media

Bag size	Diameter	Length	Surface Area	Volume	Max Flow Rate
1	7" (180 mm)	17" (435 mm)	0.25 m^2	11.0 ltr	20 m^3/hr
2	7" (180 mm)	32" (810 mm)	0.5 m^2	20.5 ltr	40 m^3/hr
1 (mini)	4" (104 mm)	9" (230 mm)	0.07 m^2	1.9 ltr	6 m^3/hr
2 (mini)	4" (104 mm)	15" (380 mm)	0.12 m^2	3.2 ltr	10 m^3/hr

Flow rate is dependant upon media type, micron rating and the fluid being filtered

Specifications

Materials of Construction

- Filtration Media: Polypropylene Felt, Viscose Felt, Nylon Felt, Polyester Felt, Nomex* Felt, Nylon Mesh
- Ring: Electro Plated Steel, Stainless Steel, Moulded Polypropylene, Polypropylene, Moulded Santoprene

**Nomex is a registered trademark of E.I. du Pont de Numours and Co Inc.*

Viscous Flow Correction Factors

Viscous Correction Factors													
Fluid Viscosity (cps)	10000	8000	6000	4000	2000	1500	1000	800	600	400	200	100	1
Flow rate (% water)	2.1	2.6	3.5	5	8	11	16	17	25	35	58	58	100

Compatibility

Material	Max Temperature	Organic Solvents	Oils and Fats	Alkalies	Organic Acids	Mineral Acids	Oxidising Agents	Resistance micro-organisms
Polypropylene	95°C (203°F)	Good	V. Good	Good	V. Good	Good	Fair	Fair
Viscose	121°C (250°F)	V. Good	V. Good	Good	Good	Poor	Fair	Fair
Polyester	150°C (302°F)	V. Good	V. Good	Good	Good	Good	Good	Good
Nylon	135°C (275°F)	V. Good	V. Good	Good	Fair	Poor	Poor	Poor
Nomex	220°C (428°F)	V. Good	V. Good	Good	Fair	Fair	Poor	Poor

Ordering Information

Bag Filters Standard

Code	Style
SG	Ring
SC	Band

Code	Diameter
7	Standard
4	Mini

Code	Yarn
1	Single
2	Double
3	Triple

Code	Media
P	Polypropylene Felt
V	Viscose Felt
N	Nylon Felt
S	Polyester Felt
T	Nomex Felt
M	Nylon Mesh

Code	Felt Rating
001	1*
005	5
010	10
025	25
050	50
100	100
150	150

Code	Mesh Rating
045	45
100	100
150	150
250	250
500	500
800	800
999	1000

**Not viscose*

Code	Ring
E	Electro Plated Steel
S	Stainless Steel
M	Moulded PP
P	Polypropylene

Code	Ring
H	Handles
L	Loops

Extended Life Bag Filters

Code	Style
SG	Standard

Code	Diameter
7	Standard
4	Mini

Code	Yarn
1	Single
2	Double
3	Triple

Code	Media
G	PP Extra Life
F	PE Extra Life

Code	Felt Rating
001	1*
005	5
010	10
025	25
050	50
100	100

**Not viscose*

Code	Ring
E	Electro Plated Steel
S	Stainless Steel
M	Moulded PP
G	Moulded P/Est
Q	Moulded Santoprene

Code	Ring
X	Plain
L	Loops

Parker domnick hunter has a continuous policy of product development and although the Company reserves the right to change specifications, it attempts to keep customers informed of any alterations. This publication is for general information only and customers are requested to contact our Process Filtration Sales Department for detailed information and advice on a products suitability for specific applications. All products are sold subject to the company's Standard conditions of sale.

Europe: +44 (0)191 4105121 dhprocess@parker.com - North America: +1 608 824 0500 dhpsales.na@parker.com www.parker.com/dhpharma

ENERGOEKONOM spol. s r.o., Wolkerova 433, CZ-250 82 Úvaly, Czech Republic, Tel.: +420 281 981 055, info@energoekonom.cz, www.energoekonom.cz

PEPLYN PLUS Filters

- liquid filters
- polypropylene

PEPLYN PLUS liquid filter cartridges are utilized for the clarification and prefiltration of a wide range of products in the fermentation and fine chemical industries.

The all polypropylene construction ensures a broad range of chemical compatibility making PEPLYN PLUS cartridges particularly suitable for the filtration of aggressive and viscous chemicals and solvents. They do not suffer from hydrolysis in aggressive solutions which would result in the contamination of the process fluid.

Extensive research has resulted in filter media with continuously graded fibre density giving progressively finer particulate retention through the depth of the media. This combined with optimized media pleating density gives PEPLYN PLUS cartridges exceptional lifetime performance.

Note: PEPLYN is a registered trademark of Parker Hannifin Corporation.

Features and Benefits

- Micron rating range from 0.6 to 100 micron
- Pleated media for high flow rates and long life
- Graded density for excellent particle retention
- Wide range of end caps to provide retrofitting of existing systems
- All polypropylene construction

Performance Characteristics

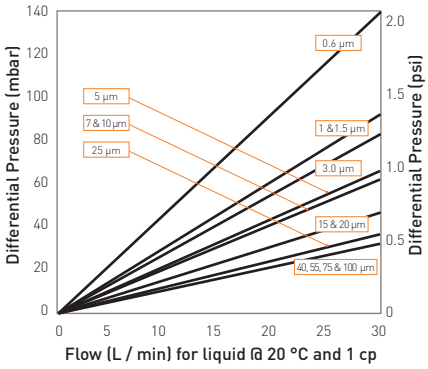

For K size for a given flow rate multiply 10¨ size differential pressure by 2

10¨ Size (250 mm) Cartridge

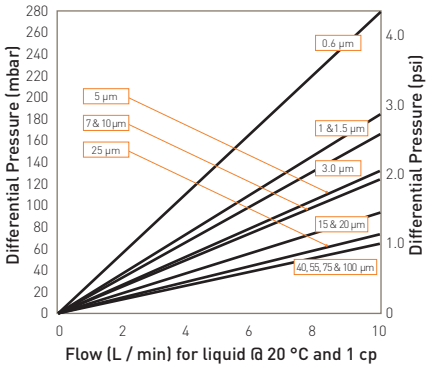

For A size for a given flow rate divide B size differential pressure by 2
For E size for a given flow rate multiply B size differential pressure by 2

B Size (65 mm) Cartridge

Specifications

Materials of Construction

- Filtration Media: Polypropylene
- Upstream Support: Polypropylene
- Downstream Support: Polypropylene
- Inner Support Core: Polypropylene
- Outer Protection Cage: Polypropylene
- End Caps: Polypropylene
- End Cap Insert (if applicable): 316L Stainless Steel*
  **Not available in B & L endcap variants*
- Standard o-rings/gaskets: Silicone / EPDM

Biological Safety

Materials conform to the relevant requirements of 21CFR Part 177 and current USP Plastics Class VI - 121 °C and ISO10993 equivalents.

Recommended Operating Conditions

Up to 70 °C (158 °F) continuous operating temperature and higher short-term temperatures during CIP to the following limits:

Temperature °C	Temperature °F	Max. Forward dP (bar)	Max. Forward dP (psi)
20	68	5.0	72.5
40	104	4.0	58.0
60	140	3.0	43.5
80	176	2.0	29.0
90	194	1.0	14.5
>100 (steam)	>212 (steam)	0.3	4.0

Effective Filtration Area (EFA)

10" (250 mm) Up to 0.79 m² (8.50 ft²)

Cleaning and Sterilization

PEPLYN PLUS cartridges can be repeatedly steam sterilized in situ or autoclaved at up to 135 °C (275 °F). They can be sanitized with hot water at up to 90 °C (194 °F) and are compatible with a wide range of chemicals.

Retention Characteristics

The retention characteristics of PEPLYN PLUS have been determined by a single-pass technique using suspensions of ISO 12103 Part 1 A2 Fine and A4 Coarse test dust in water.

Media Code	Micron Rating at Various Efficiencies >99.99% 10000	99.98% 5000	99.90% 1000	99% 100	90% 10
.60	0.60	0.57	0.54	0.32	0.20
1.0	1.00	0.95	0.90	0.70	0.50
1.5	1.50	1.40	1.10	0.80	0.60
003	3.00	2.80	1.80	1.00	0.70
005	5.00	4.70	4.50	3.50	1.00
007	7.00	6.70	6.30	4.50	2.50
010	10.00	8.00	7.00	4.80	2.80
015	15.00	12.00	10.00	7.20	4.50
020	20.00	16.00	14.00	10.00	6.00
025	25.00	20.00	17.00	12.00	7.00

Ordering Information

Cartridges

ZCPP [ ] - [ ] [ ] - [ ] [ ]

Code	Length (Nominal)	
B*	2.5"	(65 mm)
A*	5"	(125 mm)
K	5"	(125 mm)
1	10"	(250 mm)
2	20"	(500 mm)
3	30"	(750 mm)
4	40"	(1000 mm)

** Supplied in packs of 3.*

Code	Micron	
.60	0.6	µm
1.0	1.0	µm
1.5	1.5	µm
003	3.0	µm
005	5.0	µm
007	7.0	µm
010	10.0	µm

Code	Micron	
015	15.0	µm
020	20.0	µm
025	25.0	µm
040	40.0	µm
055	55.0	µm
075	75.0	µm
100*	100.0	µm

** Not available in B and A lengths.*

Code	Endcap (10")
B*	dh DOE
C	BF / 226 Bayonet
D	Fin / 222
E	Flat Top / 222
G	Recess / 222
H	UF Retrofit
J	SOE (no o-ring)
L*	dh DOE
N	Internal 213
R	BF / 222 Bayonet

Code	Endcap (Demi)
SK	Retrofit
T	TRUESEAL
Y	Demi Stub
Z	Demi A & B Std

** EPDM gaskets supplied as standard*

Code	Variant
S	Steam Sterilizable
/	Standard

For detailed operational procedures and advice on cleaning and sterilization, please contact the Technical Support Group through your usual Parker domnick hunter contact.

Code	O-rings
E	EPDM
P	PTFE Encapsulated Silicone
S*	Silicone
V	Viton

**Silicone o-ring supplied as standard without having to specify the 'S' code.*

Europe: +44 (0)191 4105121 dhprocess@parker.com - North America: +1 608 824 0500 dhpsales.na@parker.com www.parker.com/dhpharma

Parker domnick hunter has a continuous policy of product development and although the Company reserves the right to change specifications, it attempts to keep customers informed of any alterations. This publication is for general information only and customers are requested to contact our Process Filtration Sales Department for detailed information and advice on a products suitability for specific applications. All products are sold subject to the company's Standard conditions of sale.

ENERGOEKONOM spol. s r.o., Wolkerova 433, CZ-250 82 Úvaly, Czech Republic, Tel.: +420 281 981 055, info@energoekonom.cz, www.energoekonom.cz

PREPOR GF Filters

- liquid filters
- glass microfibre

PREPOR GF liquid filter cartridges are utilized for the clarification of aqueous solutions, media and biologicals.

These filters have a high dirt holding capacity and exhibit exceptional flow performance compared to polypropylene filters. The hydrophilic nature of PREPOR GF filter cartridges also makes them more suitable for gravity fed systems.

PREPOR GF utilizes a glass microfibre filter medium encased within an upstream polypropylene mesh and a downstream non-woven filter support material. PREPOR GF filter cartridges are dimensionally stable with no media migration. The pleat pack is supported by an inner polypropylene core and outer polypropylene cage, heat bonded to polypropylene end caps.

Note: PREPOR is a registered trademark of Parker Hannifin Corporation.

Features and Benefits

- Micron rating range from 0.6 to 10 micron
- Wide range of end caps to allow retrofitting of existing systems
- High filtration area
- High capacity filter media
- Heat bonded construction

Performance Characteristics

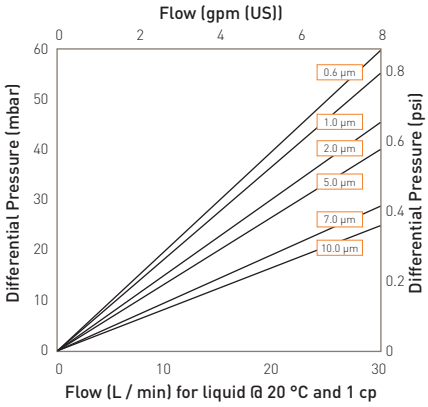

For K size for a given flow rate multiply 10¨ size differential pressure by 2

10¨ Size (250 mm) Cartridge

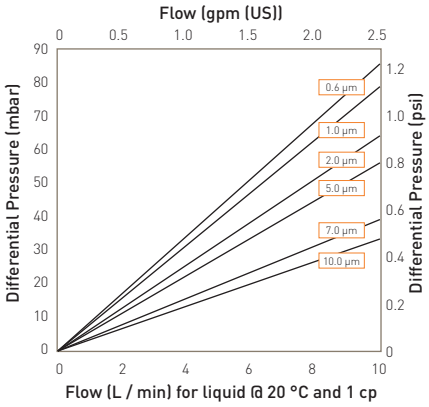

For A size for a given flow rate divide B size differential pressure by 2
For E size for a given flow rate multiply B size differential pressure by 2

B Size (65 mm) Cartridge

Specifications

Materials of Construction

- Filtration Membrane: Glass Microfibre
- Upstream Support: Polypropylene
- Downstream Support: Polypropylene
- Inner Support Core: Polypropylene
- Outer Protection Cage: Polypropylene
- End Caps: Polypropylene
- End Cap Insert (if applicable): 316L Stainless Steel*
  *Not available in B & L endcap variants
- Standard o-rings/gaskets: Silicone / EPDM

Biological Safety

Materials conform to the relevant requirements of 21CFR Part 177 and current USP Plastics Class VI - 121 °C and ISO10993 equivalents.

Recommended Operating Conditions

Up to 70 °C (158 °F) continuous operating temperature and higher short-term temperatures during CIP to the following limits:

Temperature °C	Temperature °F	Max. Forward dP (bar)	Max. Forward dP (psi)
20	68	5.0	72.5
40	104	4.0	58.0
60	140	3.0	43.5
80	176	2.0	29.0
90	194	1.0	14.5
>100 (steam)	>212 (steam)	0.3	4.0

Effective Filtration Area (EFA)

10¨ (250 mm) Up to 0.6 m² (6.3 ft²)

Cleaning and Sterilization

PREPOR GF cartridges can be repeatedly steam sterilized in situ or autoclaved at up to 121 °C (249.8 °F). They can be sanitized with hot water at up to 90 °C (194 °F) and are compatible with a wide range of chemicals.

Retention Characteristics

The retention characteristics of PREPOR GF have been determined through controlled laboratory tests challenging with a standard aqueous suspension of ACFTD (AC Fine Test Dust) using on-line laser particle counters.

Micron Rating at Various Efficiencies						
Efficiency ß Ratio	>99.99% 10000	99.98% 5000	99.90% 1000	99% 100	95% 20	90% 10
0.6 & 0.8 µm	0.60	0.50	0.46	0.33	0.25	0.22
1.0 & 1.5 µm	1.0	0.80	0.60	0.52	0.42	0.35
2.0 µm	1.5	1.2	0.93	0.77	0.63	0.47
5.0 µm	2.0	1.6	1.5	1.2	0.82	0.73
7.0 µm	5.0	4.3	3.6	2.9	2.3	2.0
10.0 µm	10.0	9.2	7.9	5.9	4.4	4.0

Ordering Information

Cartridges

ZCGF [ ] - [ ] [ ] - [ ] [ ]

Code	Length (Nominal)	
B*	2.5¨	(65 mm)
A*	5¨	(125 mm)
K	5¨	(125 mm)
1	10¨	(250 mm)
2	20¨	(500 mm)
3	30¨	(750 mm)
4	40¨	(1000 mm)

*Supplied in packs of 3.

Code	Micron	
.60	0.6	µm
.80	0.8	µm
1.0	1.0	µm
1.5	1.5	µm
002	2.0	µm
005	5.0	µm
007	7.0	µm
010	10.0	µm

Code	Endcap (10¨)
B*	dh DOE
C	BF / 226 Bayonet
D	Fin / 222
E	Flat Top / 222
G	Recess / 222
H	UF Retrofit
J	SOE (no o-ring)
L*	dh DOE
N	Internal 213
R	BF / 222 Bayonet

Code	Endcap (Demi)
SK	Retrofit
T	TRUESEAL
Y	Demi Stub
Z	Demi A & B Std

*EPDM gaskets supplied as standard

Code	Variant
S*	Steam Sterilizable
/	None

*For detailed operational procedures and advice on cleaning and sterilization, please contact the Technical Support Group through your usual Parker domnick hunter contact.

Code	O-rings
E	EPDM
P	PTFE Encapsulated Silicone
S*	Silicone
V	Viton

*Silicone o-ring supplied as standard without having to specify the 'S' code.

Europe: +44 (0)191 4105121 dhprocess@parker.com - North America: +1 608 824 0500 dhpsales.na@parker.com www.parker.com/dhpharma

Parker domnick hunter has a continuous policy of product development and although the Company reserves the right to change specifications, it attempts to keep customers informed of any alterations. This publication is for general information only and customers are requested to contact our Process Filtration Sales Department for detailed information and advice on a products suitability for specific applications. All products are sold subject to the company's Standard conditions of sale.

ENERGOEKONOM spol. s r.o., Wolkerova 433, CZ-250 82 Úvaly, Czech Republic, Tel.: +420 281 981 055, info@energoekonom.cz, www.energoekonom.cz

PROSTEEL A & N Filters

- liquid filters
- 316L stainless steel

PROSTEEL filters provide the ideal solution in applications where traditional polymer based filters are limited by compatibility, exposure time or a combination of high temperature and viscosity.

They are ideally suited to filtration of solvents used in a wide range of processes in pharmaceutical production.

The Parker domnick hunter range of stainless steel filters provides the solution to compatibility issues while maintaining excellent flow rates for clarifying duties. The filters are available in two formats, in both absolute and nominal retention ratings and in a pleated or culindrical wrap construction. This allows a cost-effective selection depending on flow rate, retention and dirt holding requirements.

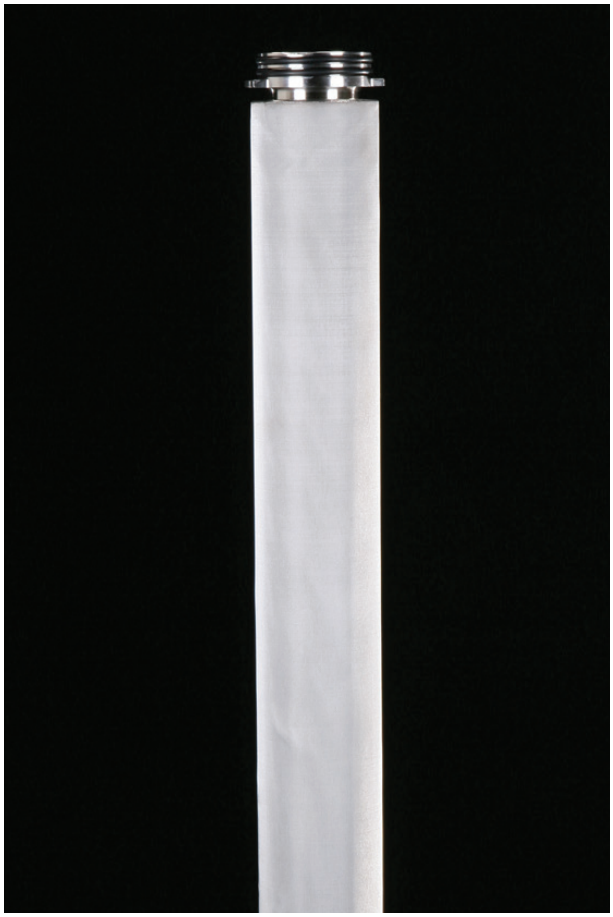

Features and Benefits

- Absolute and nominally rated stainless steel liquid filters
- Ideal for aggressive solvents, viscous and hot solutions
- PROSTEEL A available in 3, 5 and 10 micron removal ratings
- PROSTEEL N removal rating from 5 to 100 microns
- Compatible with most solvents
- Stainless steel mesh ensures excellent regeneration characteristics for extended service life
- Available in two formats; pleated and wrapped, for complete system optimization

Performance Characteristics

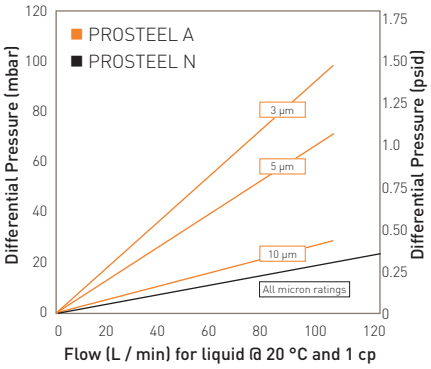

Pleated cartridge flow rates
10¨ Size (250 mm) Cartridge

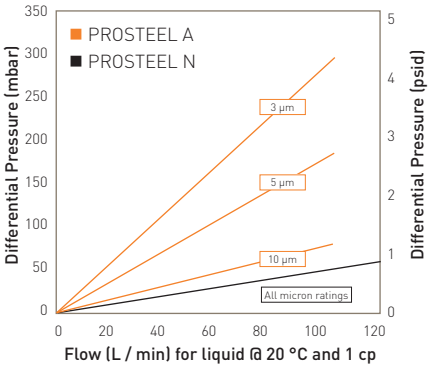

Cylindrically wrapped cartridge flow rates
10¨ Size (250 mm) Cartridge

Specifications

Materials of Construction

- Filtration Media: 316L Stainless Steel
- Inner Support Core: 316L Stainless Steel
- Outer Protection Cage: 316L Stainless Steel
- End Caps: 316L Stainless Steel
- Standard o-rings/gaskets*: EPDM
- Assembly Method: TIG Welded

All o-rings are manufactured from FDA approved compounds.

Recommended Operating Conditions

Operating Temperature °C	°F	Maximum Forward DP (bar)	(psi)	Maximum Reverse DP (bar)	(psi)
200	392	25	364	3	44

Note: The maximum operating temperature is dependant on o-ring selection and properties of the liquid being filtered.

Effective Filtration Area (EFA)

- ZCCF / ZCCM Cylindrical Wrap
  10" (250 mm) 0.05 m^2 (0.53 ft^2)
- ZCMF / ZCPM Pleated
  10" (250 mm) 0.13 m^2 (1.39 ft^2)

PROSTEEL A Retention Characteristics

The retention characteristics of the stainless steel filters are determined using ACFTD in accordance with the single pass test ASTM 795-88.

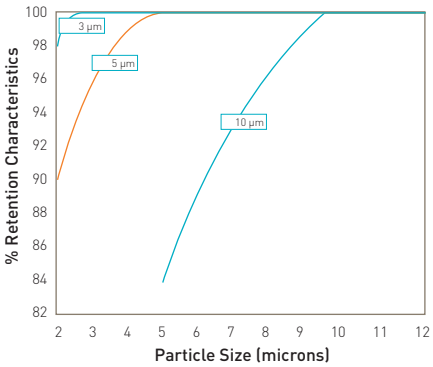

Ordering Information

Prosteel A

ZC [ ] [ ] - [ ] [ ] - [ ]

Code	Type
CF	Wrapped
MF	Pleated

Code	Length (Nominal)		
B	2.5"	(65 mm)
A	5"	(125 mm)
1	10"	(250 mm)
2	20"	(500 mm)
3	30"	(750 mm)

Code	Micron	
003	3.0	µm
005	5.0	µm
010	10.0	µm

Code	Endcap (10")
B	dh DOE
C	226 Bayonet/Flat

Code	Endcap (Demi)
T	TRUESEAL
Z	Demi A & B Std

Code	O-rings
E*	EPDM
P	PTFE Encapsulated Silicone
S	Silicone
V	Viton

*EPDM o-ring supplied as standard without having to specify the 'E' code.

Prosteel N

ZC [ ] [ ] - [ ] [ ] - [ ]

Code	Type
CM	Wrapped
PM	Pleated

All cartridges are supplied as single items.

Code	Length (Nominal)		
B	2.5"	(65 mm)
A	5"	(125 mm)
1	10"	(250 mm)
2	20"	(500 mm)
3	30"	(750 mm)

Code	Micron	
005	5.0	µm
010	10.0	µm
020	20.0	µm
040	40.0	µm
100	100.0	µm

Code	Endcap (10")
B	dh DOE
C	226 Bayonet/Flat

Code	Endcap (Demi)
T	TRUESEAL
Z	Demi A & B Std

Code	O-rings
E*	EPDM
P	PTFE Encapsulated Silicone
S	Silicone
V	Viton

*EPDM o-ring supplied as standard without having to specify the 'E' code.

Europe: +44 (0)191 4105121 dhprocess@parker.com - North America: +1 608 824 0500 dhpsales.na@parker.com www.parker.com/dhpharma

Parker domnick hunter has a continuous policy of product development and although the Company reserves the right to change specifications, it attempts to keep customers informed of any alterations. This publication is for general information only and customers are requested to contact our Process Filtration Sales Department for detailed information and advice on a products suitability for specific applications. All products are sold subject to the company's Standard conditions of sale.

ENERGOEKONOM spol. s r.o., Wolkerova 433, CZ-250 82 Úvaly, Czech Republic, Tel.: +420 281 981 055, info@energoekonom.cz, www.energoekonom.cz

SPUNFLOW QE Filters

- liquid filters
- polypropylene

SPUNFLOW QE are the economical choice for applications where high removal efficiency and low filtration costs are important. Graded density, high porosity, SPUNFLOW QE filter elements are manufactured from thermally bonded polypropylene microfibres. Offering high throughputs, low pressure loss, high dirt holding capacity and long onstream life, the bonded fibre construction minimises any possibility of fibre migration and is rugged enough to resist particle shedding, even under pulse conditions.

SPUNFLOW QE filters have excellent chemical resistance and contain no surfactants, resins, binders nor adhesives. The fibre matrix has been engineered to provide structural integrity throughout the long service life of the cartridge and finish free construction provides optimum fluid purity and eliminates foaming.

Features and Benefits

- Thermally bonded polypropylene
- 3 to 75 microns
- High dirt holding capacity
- High throughputs
- Low pressure loss
- 99% efficiency

Performance Characteristics

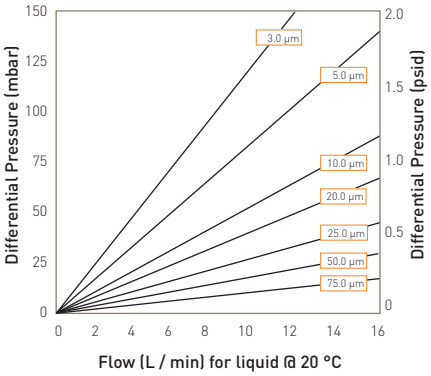

10¨ Size (250 mm) Cartridge

Specifications

Materials of Construction

- Filtration Media: Polypropylene
- End Caps: Polypropylene

Recommended Operating Conditions

Maximum Temperature:
Polypropylene - 65°C (149°F)

Maximum Differential Pressure
4 bar (58 psid) at 20°C (68°F)

Maximum Recommended Differential Pressure
2 bar (29 psid)

Cleaning and Sterilization

Elements can be autoclaved at 121°C (250°F) for 30 minutes and are compatible with a wide range of chemicals.

Dimensions

Standard Cartridge
Outside diameter: 62mm (2.44") x
Inside diameter: 29mm (1.14")

Endcapped Cartridge
Outside diameter: 64mm (2.51") x
Inside diameter: 27mm (1.06")

Ordering Information

QE [ ] [ ] [ ] [ ] [ ]

Code	Length (Nominal)	
09	9.75"	(247 mm)
10	9.875"	(251 mm)
11	10"	(254 mm)
19	19.50"	(500 mm)
20	20"	(508 mm)
29	29.50"	(750 mm)
30	30"	(762 mm)
39	39.25"	(1000 mm)
40	40"	(1016 mm)

Other lengths available upon request

Code	Material
P	Polypropylene

Code	Micron
03	3 µm
05	5 µm
10	10 µm
25	25 µm
50	50 µm
75	75 µm

Code	End Fitting
0	DOE
2	Flat / 226
3	Flat / 222
6	Flat / 118 / 020
7	Fin / 226
8	Fin / 222
9	213
X	Plain
E	Ext Core

Code	Seal Material
X	None
E	EPDM
N	Nitrile
P*	PE
S	Silicone
V	Viton**

**Plain End or DOE only*

Minimum Box Quantity	
10"	40
20"	20
30"	20
40"	20

***Viton is a registered trademark of E.I. DuPont de Nemours & Co., Inc*

Parker domnick hunter has a continuous policy of product development and although the Company reserves the right to change specifications, it attempts to keep customers informed of any alterations. This publication is for general information only and customers are requested to contact our Process Filtration Sales Department for detailed information and advice on a products suitability for specific applications. All products are sold subject to the company's Standard conditions of sale.

Europe: +44 (0)191 4105121 dhprocess@parker.com - North America: +1 608 824 0500 dhpsales.na@parker.com www.parker.com/dhpharma

ENERGOEKONOM spol. s r.o., Wolkerova 433, CZ-250 82 Úvaly, Czech Republic, Tel.: +420 281 981 055, info@energoekonom.cz, www.energoekonom.cz

PROPOR LR Filters

- liquid filters
- polyethersulphone

PROPOR LR filters have been specifically designed for high flow and effective removal of *Ralstonia pickettii* and other diminutive organisms.

A number of studies have concluded that not all microorganisms are removed by 0.2 micron rated membranes under all conditions. PROPOR LR filters use a 0.1 micron rated membrane, which can remove diminutive organisms, while maintaining flow rates typical of a 0.2 micron filtration system.

Ralstonia pickettii is one organism that has frequently been shown to penetrate a 0.2 micron rated membrane and is a common contaminant in purified water systems. PROPOR LR filters have been validated directly against the removal of *Ralstonia pickettii*.

Note: PROPOR and DEMICAP are registered trademarks of Parker Hannifin Corporation.

Features and Benefits

- Fully correlated against *Ralstonia pickettii* and integrity testable
- Increases retention efficiency whilst maintaining existing 0.2 micron rated system size
- Up to 2.5 times higher flow rate than competitive 0.1 micron rated filters
- MURUS and DEMICAPs can be gamma-irradiated and autoclaved

Performance Characteristics

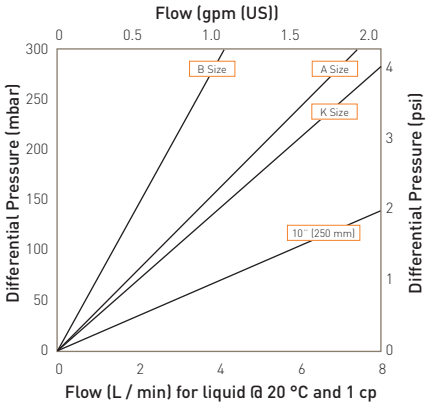

Cartridge flow rates

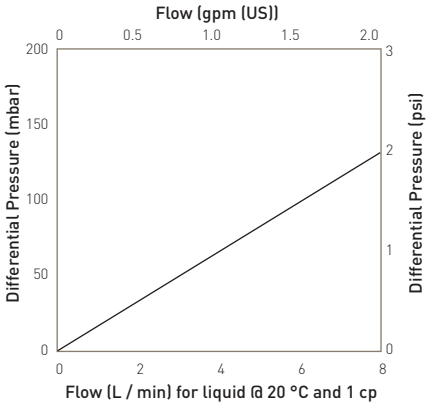

MURUS flow rates (10" Size (250 mm))

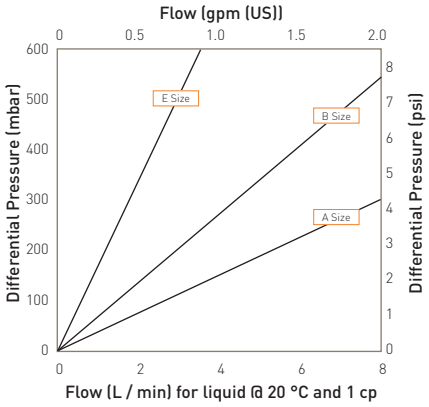

DEMICAP flow rates

Specifications

Materials of Construction

- Filtration Membrane: Polyethersulphone
- Upstream Support: Polyester
- Downstream Support: Polyester

Filter Cartridges

- Inner Support Core: Polypropylene
- Outer Protection Cage: Polypropylene
- End Caps: Nylon
- End Caps Insert: 316L Stainless Steel

MURUS Disposable Filter Capsules

- Core: Polypropylene
- Sleeve: Polypropylene
- End Caps Insert: 316L Stainless Steel
- Standard o-rings/gaskets: Silicone
- Capsule Body: Polypropylene
- Capsules Vent Seals: Silicone

DEMICAP Filter Capsules

- Core: Polypropylene
- Sleeve: Polypropylene
- End Caps: Nylon
- Capsule Body: Nylon
- Capsules Vent Seals: Silicone
- Filling Bell: Polycarbonate

Syringe Filters

- Body: Polypropylene

R ecommended Operating Conditions

Filter Cartridges

Up to 70 °C (158 °F) continuous operating temperature and higher short-term temperatures during CIP to the following limits:

Temperature °C	Temperature °F	Max. Forward dP (bar)	Max. Forward dP (psi)
20	68	5.0	72.5
40	104	4.0	58.0
60	140	3.0	43.5
80	176	2.0	29.0
90	194	1.7	24.6

MURUS Disposable Filter Capsules

Up to 25 °C (77 °F) @ 5.5 barg (79.7 psig)
Up to 60 °C (140 °F) @ 2.8 barg (40.6 psig)

Parker Hannifin certify that this product complies with the current European Council Pressure Equipment Directive (PED) - Sound Engineering Practice (SEP). This product is intended for use with Group 1 & 2 Dangerous and Harmless Liquids and Group 2 Harmless Gases at the operating conditions stated in this document. The Pressure Equipment Directive mandates that category SEP product cannot bear the CE mark.

DEMICAP Filter Capsules

Up to 40 °C (104 °F) at line pressures up to 5.0 barg (72 psig).

Effective Filtration Area (EFA)

10¨ (250 mm):	0.55 m^2	(5.92 ft^2)
K Size:	0.26 m^2	(2.79 ft^2)
A Size:	0.20 m^2	(2.15 ft^2)
B Size:	0.10 m^2	(1.07 ft^2)
E Size:	0.05 m^2	(0.53 ft^2)
Syringe ø50 mm:	14.50 cm^2	(2.25 in^2)

	Autoclave Cycles	Autoclave Temp	Steam-in-Place Cycles (30 min.)	Steam-in-Place Temp
Cartridges	10	130 °C (266 °F)	30	130 °C (266 °F)
MURUS	5	130 °C (266 °F)	-	-
DEMICAP	10	130 °C (266 °F)	-	-
Syringe	1	130 °C (266 °F)	-	-

Sterilization

PROPOR LR filter cartridges can be sanitized with hot water at up to 90 °C (194 °F) and are compatible with a wide range of chemicals.

For detailed operational procedures and advice on cleaning and sterilization, please contact the Technical Support Group through your usual Parker domnick hunter contact.

Biological Safety

Materials conform to the relevant requirements of 21CFR Part 177 and current USP Plastics Class VI - 121 °C and ISO10993 equivalents.

Quality Standards

Pharmaceutical grade products are manufactured in accordance with cGMP, 100% flushed with pharmaceutical grade purified water and integrity tested prior to despatch. A sample of each lot is tested to demonstrate conformity to validated claims.

Gamma-Irradiation

PROPOR LR MURUS & DEMICAP disposable filters can be gamma-irradiated up to a maximum dosage of 40 kGy.

Performance Characteristics

TOC / Conductivity
The filtrate quality from a 10" (250 mm) PROPOR LR conforms to the requirements of current USP <643> (TOC) and USP <645> (conductivity) within the first 200 ml flush of purified water.

Endotoxins
Aqueous extracts from the 10" (250 mm) PROPOR LR contain < 0.25 EU / ml when tested in accordance with the Limulus Amoebocyte Lysate test.

Non-Volatile Extractables (NVE)
Total NVEs extracted in the first 5 litre flush of purified water for a 10" (250 mm) cartridge are <10 mg.

Total NVEs extracted in the first 5 litre flush of purified water for an A size 7.9" (200 mm) DEMICAP capsule are <5 mg.

Pharmaceutical Validation
A full validation guide is available upon request from Laboratory Services Group (LSG).

Oxidizable Substances
PROPOR LR filter cartridges meet current USP and EP quality standards for sterile purified water for oxidizable substances following a <1 litre water flush.

Integrity Test Data
All filters are integrity testable to the following limits when wet with water (diffusional flow) and 60 / 40 : IPA / Water (bubble point) using air as the test gas.

Micron Rating		0.1
Filter Cartridges / MURUS / DEMICAP		
Min. Bubble Point	(barg)	2.1
	(psig)	30.0
Filter Cartridges / MURUS / DEMICAP / Syringe Filters		
Diffusional Flow	(barg)	4.2
Test Pressure	(psig)	61.0
Filter Cartridges / MURUS / DEMICAP / Syringe Filters		
Max. Diffusional Flow (10")		27.0
(ml / min)	(K)	12.6
	(A)	10.1
	(B)	4.9
	(E)	2.1

(Maximum allowable diffusional flows are directly correlated to full retention of *Ralstonia pickettii*.)

Retention Characteristics
PROPOR LR filters are validated by bacterial challenge testing with *Ralstonia pickettii* and *Brevundimonas diminuta* to current ASTM F838 methodology (10^7 organisms / cm^2 EFA minimum) with typical in-house challenge levels being 10^{11} organisms per 10" (250 mm) filter cartridge.

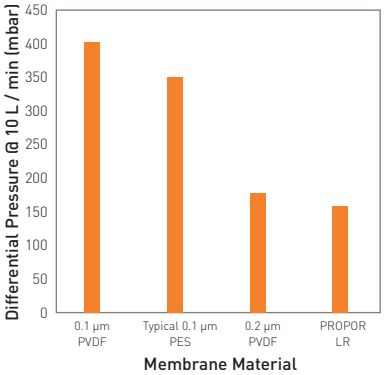

Differential pressure comparison of 10" (250 mm) sterilizing grade filters

Ordering Information

Cartridges

ZCLR [ ] - [ ] [ ] - [ ] [ ]

Code	Length (Nominal)
B*	2.5" (65 mm)
A*	5" (125 mm)
K	5" (125 mm)
1	10" (250 mm)
2	20" (500 mm)
3	30" (750 mm)
4	40" (1000 mm)

** Supplied in packs of 3.*

Code	Micron
010	0.1 µm

Code	Endcap (10")
C	BF / 226 Bayonet
D	Fin / 222
E	Flat Top / 222
G	Recess / 222
R	BF / 222 Bayonet

Code	Endcap (Demi)
T	TRUESEAL
Y	Demi Stub
Z	Demi A & B Std

Code	Variant
P	Pharmaceutical

Code	O-rings
E	EPDM
S	Silicone
V	Viton

MURUS Capsules

ZLLR [ ] - [ ] [ ] [ ] - [ ] [ ] [ ] - [ ]

Code	Length (Nominal)
K	5" (125 mm)
1	10" (250 mm)
2	20" (500 mm)
3	30" (750 mm)

Code	Micron
010	0.1 µm

Code	Inlet Connection
A	3/4" Tri-Clamp
B	1 1/2" Tri-Clamp
D	1" Hosebarb
T	1" Tri-Clamp

Code	Outlet Connection
A	3/4" Tri-Clamp
B	1 1/2" Tri-Clamp
D	1" Hosebarb
T	1" Tri-Clamp

Code	Variant
P	Pharmaceutical

Code	Grade
N	Non-sterile
S	Pre-sterilized γ (>25 kGy)

Code	Design
L	In-Line
T*	T-Port

**Only available with a 1" Tri-Clamp*

Code	O-rings
E	EPDM
S*	Silicone
V	Viton

** Silicone o-ring supplied as standard without having to specify the 'S' code.*

DEMICAP Capsules

ZELR [ ] - [ ] [ ] [ ] - [ ] [ ] [ ] - [ ]

Code	Length (Nominal)
E	4.4" (113 mm)
B	5.5" (140 mm)
A	7.9" (200 mm)

Code	Micron
010	0.1 µm

Code	Inlet Connection
T	1" Tri-Clamp
N	1/2" NPT Male
H	1/2" Hosebarb
G	Stepped Hosebarb
M	1/4" NPT Male
Q	Walther QC
R	Grommel / QC

Code	Outlet Connection
T	1" Tri-Clamp
N	1/2" NPT Male
H	1/2" Hosebarb
G	Stepped Hosebarb
M	1/4" NPT Male
Q	Walther QC
R	Grommel / QC

Code	Variant
P	Pharmaceutical

Code	Grade
N	Non-sterile
S	Pre-sterilized γ (>25 kGy)

Code	Pack N°
3	Pack of 3

Code	Accessory
FB	Filling Bell

G & H connections only

Syringe Filters

ZSLR [ ] - [ ] [ ] [ ] - [ ] [ ] [ ] [ ]

Code	Diameter
050	50 mm

Code	Micron
010	0.1 µm

Code	Inlet Connection
F	Female Luer Lock
G	Stepped Hosebarb

Code	Outlet Connection
F	Female Luer Lock
G	Stepped Hosebarb

Code	Variant
P	Pharmaceutical

Code	Grade
N	Non-sterile

Code	Options
S	Standard

Code	Pack N°
025	25 per box

Europe: +44 (0)191 4105121 dhprocess@parker.com - North America: +1 608 824 0500 dhpsales.na@parker.com www.parker.com/dhpharma

Parker domnick hunter has a continuous policy of product development and although the Company reserves the right to change specifications, it attempts to keep customers informed of any alterations. This publication is for general information only and customers are requested to contact our Process Filtration Sales Department for detailed information and advice on a products suitability for specific applications. All products are sold subject to the company's Standard conditions of sale.

ENERGOEKONOM spol. s r.o., Wolkerova 433, CZ-250 82 Úvaly, Czech Republic, Tel.: +420 281 981 055, info@energoekonom.cz, www.energoekonom.cz

TETPOR LIQUID Filters

- liquid filters
- PTFE

TETPOR LIQUID filters are particularly suitable for sterilization and particulate removal from aggressive chemicals (including acids, bases and solvents) within a wide range of critical processing industries.

The superior performance, strength and durability of TETPOR LIQUID filters stems from the use of a single layer, high security PTFE membrane, which has a high dirt holding capacity due to its high voids volume. This results in low pressure drops and long service life.

High flow rates are achieved due to the optimized pleat pack density and the superior design construction of TETPOR LIQUID filters.

Note: TETPOR is a registered trademark of Parker Hannifin Corporation.

Features and Benefits

- Superior chemical resistance of PTFE membrane combined with polypropylene hardware
- Integrity tested prior to despatch
- Validated to current ASTM F838 methodology
- Comprehensive range of end cap configurations for retrofitting

Performance Characteristics

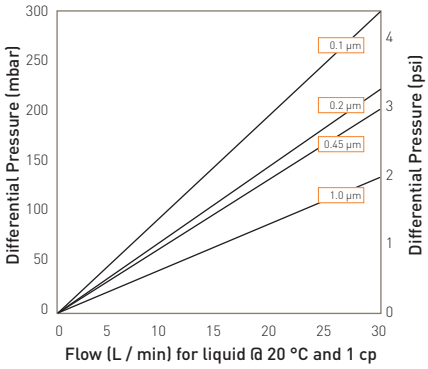

For K size for a given flow rate multiply 10¨ size differential pressure by 2

10¨ Size (250 mm) Cartridge

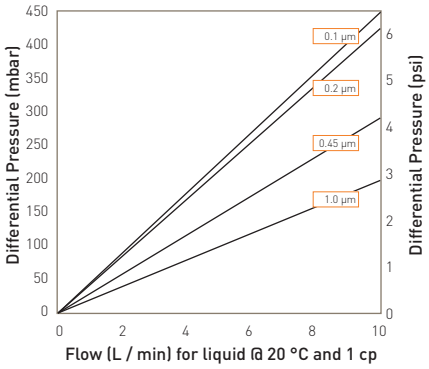

For A size for a given flow rate divide B size differential pressure by 2
For E sie for a given flow rate multiply B size differential pressure by 2

B Size (65 mm) Cartridge and Capsule

Specifications

Materials of Construction

- Filtration Membrane: PTFE
- Upstream Support: Polypropylene
- Downstream Support: Polypropylene

Filter Cartridges

- Inner Support Core: Polypropylene
- Outer Protection Cage: Polypropylene
- End Caps: Polypropylene
- End Caps Insert: 316L Stainless Steel

**Not available in B endcap variant*

- Standard o-rings/gaskets: Viton

MURUS Disposable Filter Capsules

- Core: Polypropylene
- Sleeve: Polypropylene
- End Caps Insert: 316L Stainless Steel
- Standard o-rings/gaskets: Silicone
- Capsule Body: Polypropylene
- Capsules Vent Seals: Silicone

DEMICAP Filter Capsules

- Core: Polypropylene
- Sleeve: Polypropylene
- End Caps: Polypropylene
- Capsule Body: Polypropylene
- Capsules Vent Seals: Silicone
- Filling Bell: Polycarbonate

Syringe Filters

- Body: Polypropylene

Recommended Operating Conditions

Filter Cartridges

Up to 70 °C (158 °F) continuous operating temperature and higher short-term temperatures during CIP to the following limits:

Temperature °C	Temperature °F	Max. Forward dP (bar)	Max. Forward dP (psi)
20	68	5.0	72.5
40	104	4.0	58.0
60	140	3.0	43.5
80	176	2.0	29.0
90	194	1.7	24.6

MURUS Disposable Filter Capsules

Up to 25 °C (77 °F) @ 5.5 barg (79.7 psig)
Up to 60 °C (140 °F) @ 2.8 barg (40.6 psig)

Parker Hannifin certify that this product complies with the current European Council Pressure Equipment Directive (PED) - Sound Engineering Practice (SEP). This product is intended for use with Group 1 & 2 Dangerous and Harmless Liquids and Group 2 Harmless Gases at the operating conditions stated in this document. The Pressure Equipment Directive mandates that category SEP product cannot bear the CE mark.

DEMICAP Filter Capsules

Up to 40 °C (104 °F) at line pressures up to 5.0 barg (72 psig).

Effective Filtration Area (EFA)

10" (250 mm):	0.77 m^2	(8.28 ft^2)
K Size:	0.36 m^2	(3.87 ft^2)
A Size:	0.25 m^2	(2.69 ft^2)
B Size:	0.12 m^2	(1.29 ft^2)
E Size:	0.06 m^2	(0.64 ft^2)
Syringe ø50 mm:	14.50 cm^2	(2.25 in^2)

Sterilization

	Autoclave Cycles	Autoclave Temp	Steam-in-Place Cycles (30 min.)	Steam-in-Place Temp
Cartridges	120	142 °C (287.6 °F)	120	142 °C (287.6 °F)
MURUS	5	130 °C (266 °F)	-	-
DEMICAP	100	135 °C (275 °F)	-	-
Syringe	1	130 °C (266 °F)	-	-

TETPOR LIQUID filter cartridges can be sanitized with hot water at up to 90 °C (194 °F) and are compatible with a wide range of chemicals.

For detailed operational procedures and advice on cleaning and sterilization, please contact the Technical Support Group through your usual Parker domnick hunter contact.

Biological Safety

Materials conform to the relevant requirements of 21CFR Part 177 and current USP Plastics Class VI - 121 °C and ISO10993 equivalents.

Quality Standards

Pharmaceutical grade products are manufactured in accordance with cGMP, 100% flushed with pharmaceutical grade purified water and integrity tested prior to despatch. A sample of each lot is tested to demonstrate conformity to validated claims.

Performance Characteristics

TOC / Conductivity
The filtrate quality from a 10¨ (250 mm) TETPOR LIQUID conforms to the requirements of current USP <643> (TOC) and USP <645> (conductivity).

Endotoxins
Aqueous extracts from the 10¨ (250 mm) TETPOR LIQUID contain < 0.25 EU / ml when tested in accordance with the Limulus Amoebocyte Lysate test.

Non-Volatile Extractables (NVE)
Total NVEs extracted in the first 5 litre flush of purified water for a 10¨ (250 mm) cartridge are <5 mg.

Pharmaceutical Validation
A full validation guide is available upon request from Laboratory Services Group (LSG).

Oxidizable Substances
TETPOR LIQUID filter cartridges meet current USP and EP quality standards for sterile purified water for oxidizable substances following a <1 litre water flush.

Integrity Test Data
All filters are integrity testable to the following limits when wet with 60 / 40 IPA / Water and using air as the test gas.

Micron Rating		0.1	0.2	0.45	1.0
Filter Cartridges / MURUS / DEMICAP / Syringe Filters					
Min. Bubble Point	(barg)	1.3	1.0	0.7	-
	(psig)	18.8	14.5	10.1	-
Filter Cartridges / MURUS / DEMICAP / Syringe Filters					
Diffusional Flow	(barg)	1.0	0.8	0.4	-
Test Pressure	(psig)	14.5	11.6	5.8	-
Filter Cartridges / MURUS / DEMICAP / Syringe Filters					
Max. Diffusional Flow (10¨)		27.0	18.0	18.0	-
(ml / min)	(K)	12.7	8.5	8.5	-
	(A)	9.0	6.0	6.0	-
	(B)	4.5	3.0	3.0	-
	(E)	2.3	1.5	1.5	-

Retention Characteristics
TETPOR LIQUID filter cartridges are validated by bacterial challenge testing with *Brevundimonas diminuta* to current ASTM F838 methodology (10^7 organisms / cm^2 EFA minimum) with typical in-house challenge levels being 10^{11} organisms per 10¨ (250 mm) filter cartridge.

Ordering Information

Cartridges

ZCMT [ ] - [ ] [ ] [ ] [ ]

Code	Length (Nominal)
B*	2.5" (65 mm)
A*	5" (125 mm)
K	5" (125 mm)
1	10" (250 mm)
2	20" (500 mm)
3	30" (750 mm)
4	40" (1000 mm)

* Supplied in packs of 3.

Code	Micron
010	0.1 µm
020	0.2 µm
045	0.45 µm
100	1.0 µm

Code	Endcap (10")
B*	dh DOE
C	BF / 226 Bayonet
D	Fin / 222
E	Flat Top / 222
G	Recess / 222
R	BF / 222 Bayonet

Code	Endcap (Demi)
SK	Retrofit
T	TRUESEAL
Y	Demi Stub
Z	Demi A & B Std

* EPDM gaskets supplied as standard
Note: Viton supplied as standard on all other endcap options.

Code	Variant
L	Liquid
P	Pharmaceutical
S	Steam Sterilizable

Code	O-rings
E	EPDM
P	PTFE Encapsulated Silicone
S	Silicone
V*	Viton

* Viton o-ring supplied as standard without having to specify the 'V' code.

MURUS Capsules

ZLMT [ ] - [ ] [ ] [ ] - [ ] [ ] [ ] - [ ]

Code	Length (Nominal)
K	5" (125 mm)
1	10" (250 mm)
2	20" (500 mm)
3	30" (750 mm)

Code	Micron
010	0.1 µm
020	0.2 µm
045	0.45 µm
100	1.0 µm

Code	Inlet Connection
A	3/4" Tri-Clamp
B	1 1/2" Tri-Clamp
D	1" Hosebarb
T	1" Tri-Clamp

Code	Outlet Connection
A	3/4" Tri-Clamp
B	1 1/2" Tri-Clamp
D	1" Hosebarb
T	1" Tri-Clamp

Code	Variant
P	Pharmaceutical

Code	Grade
N	Non-sterile

Code	Design
L	In-Line
T*	T-Port

*Only available with a 1" Tri-Clamp

Code	O-rings
E	EPDM
S*	Silicone
V	Viton

* Silicone o-ring supplied as standard without having to specify the 'S' code.

DEMICAP Capsules

ZEMT [ ] - [ ] [ ] [ ] - [ ] [ ] [ ] [ ]

Code	Length (Nominal)
E	4.4" (113 mm)
B	5.5" (140 mm)
A	7.9" (200 mm)

Code	Micron
010	0.1 µm
020	0.2 µm
045	0.45 µm
100	1.0 µm

Code	Inlet Connection
T	1" Tri-Clamp
N	1/2" NPT Male
H	1/2" Hosebarb
G	Stepped Hosebarb
M	1/4" NPT Male
Q	Walther QC
R	Grommel / QC
V	3/8" NPT Female

Code	Outlet Connection
T	1" Tri-Clamp
N	1/2" NPT Male
H	1/2" Hosebarb
G	Stepped Hosebarb
M	1/4" NPT Male
Q	Walther QC
R	Grommel / QC
V	3/8" NPT Female

Code	Variant
P	Pharmaceutical

Code	Grade
N	Non-Sterile

Code	Pack N°
3	Pack of 3

Code	Accessory
FB	Filling Bell

G & H connections only

Syringe Filters

ZSMT [ ] - [ ] [ ] [ ] - [ ] [ ] [ ] [ ]

Code	Diameter
050	50 mm

Code	Micron
020	0.2 µm

Code	Inlet Connection
F	Female Luer Lock
G	Stepped Hosebarb

Code	Outlet Connection
F	Female Luer Lock
G	Stepped Hosebarb

Code	Variant
P	Pharmaceutical

Code	Grade
N	Non-sterile

Code	Options
S	Standard

Code	Pack N°
025	25 per box

Europe: +44 (0)191 4105121 dhprocess@parker.com - North America: +1 608 824 0500 dhpsales.na@parker.com www.parker.com/dhpharma

Parker domnick hunter has a continuous policy of product development and although the Company reserves the right to change specifications, it attempts to keep customers informed of any alterations. This publication is for general information only and customers are requested to contact our Process Filtration Sales Department for detailed information and advice on a products suitability for specific applications. All products are sold subject to the company's Standard conditions of sale.

ENERGOEKONOM spol. s r.o., Wolkerova 433, CZ-250 82 Úvaly, Czech Republic, Tel.: +420 281 981 055, info@energoekonom.cz, www.energoekonom.cz

TETPOR PLUS Filters

- liquid filters
- polytetrafluoroethylene

TETPOR PLUS filters are manufactured entirely from fluoropolymers making them extremely resistant to a wide range of aggressive chemicals.

TETPOR PLUS filter cartridges have been specifically designed for the filtration of liquids and gases in the bulk pharmaceutical, chemical and biopharmaceutical industry where particulate removal, bioburden reduction and guaranteed sterility is required.

The increasing use of ozonation for the treatment of WFI systems has highlighted compatibility issues with vent filters based on standard polypropylene components. The introduction of a fully validated 0.2 micron sterilizing grade TETPOR PLUS filter cartridge provides guaranteed long term performance in these applications with the additional benefit that the filters integrity can be validated by the water intrusion test method.

The high voids volume single layer PTFE membrane ensures an excellent combination of flow rate and retention.

Note: TETPOR is a registered trademark of Parker Hannifin Corporation.

Features and Benefits

- Sterile filtration of oxygen / oxygen enriched feeds in cell culture
- Exceptional resistance to solvents and oxidative environments
- Ideal for sterile venting on ozonated water systems
- Fully validated to ASTM F838 for sterilizing grade filters
- PTFE membrane
- Available in a wide range of micron ratings to suit all applications

Performance Characteristics

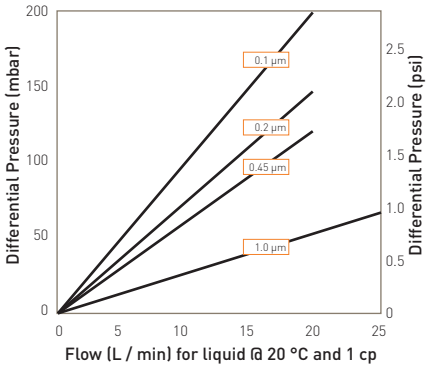

10¨ Size (250 mm) Cartridge

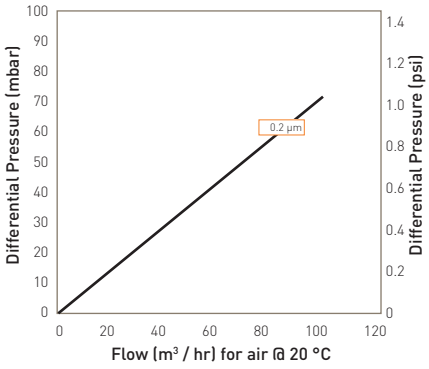

10¨ Size (250 mm) Cartridge

Specifications

Materials of Construction

- Filtration Membrane: Polytetrafluoroethylene
- Upstream Support: Polytetrafluoroethylene
- Downstream Support: Polytetrafluoroethylene
- Inner Support Core: PFA
- Outer Protection Cage: PFA
- End Caps: PFA

Biological Safety

Materials conform to the relevant requirements of 21CFR Part 177 and current USP Plastics Class VI - 121 °C and ISO10993 equivalents.

Recommended Operating Conditions

Up to 125 °C (257 °F) continuous operating temperature and higher short-term temperatures during CIP to the following limits:

Temperature °C	Temperature °F	Max. Forward dP (bar)	Max. Forward dP (psi)
20	68	5.5	80.0
75	167	3.8	55.0
125	257	2.0	30.0

Effective Filtration Area (EFA)

10" (250 mm)	Up to 0.63 m^2 (6.78 ft^2)
K Size (125 mm)	Up to 0.32 m^2 (3.44 ft^2)

Cleaning and Sterilization

TETPOR PLUS cartridges can be repeatedly steam sterilized in situ or autoclaved at up to 142 °C (287.6 °F) for a maximum of 30 cycles.

Retention Characteristics

TETPOR PLUS filter cartridges are validated by bacterial challenge testing with *Brevundimonas diminuta* to current ASTM F838 methodology (10^7 organisms / cm^2 EFA minimum) with typical in-house challenge levels being 10^{11} organisms per 10" (250 mm) module.

Integrity Test Data

The following is the integrity test information for the micron ratings available within the TETPOR PLUS product range. Diffusional flow and bubble point values are given for cartridges wetted in 60:40 v/v IPA:Water solution.

Micron Rating		0.1	0.2	0.45	1.0
Diffusional Flow	(barg)	1.45	0.8	0.45	3.0
Test Pressure	(psig)	19.0	11.6	0.5	0.2
Max. Diffusional Flow	(10")	35.0	16.5	50.0	-
(ml / min)	(K)	16.3	7.7	23.3	-
Min. Bubble Point	(barg)	1.45	1.0	0.48	3.0
	(psig)	19.0	15.0	0.5	0.2
Water Intrusion	(barg)	-	2.5	-	-
Test Pressure	(psig)	-	36.3	-	-
Max. Water Intrusion	(10")	-	13.5	-	-
(ml / 10 min)	(K)	-	6.4	-	-

Pharmaceutical Validation

0.2µm sterilizing grade version is supported by a full validation guide, available upon request from Laboratory Services Group (LSG).

Ordering Information

ZCTP [ ] - [ ] [ ] - [ ] - [ ] [ ]

Code	Length (Nominal)	
K	5"	(125 mm)
1	10"	(250 mm)
2	20"	(500 mm)
3	30"	(750 mm)
4	40"	(1000 mm)

Code	Micron	
010	0.1	µm
020	0.2	µm
045	0.45	µm
100	1.0	µm

Code	Endcap (10")
CF	Flat Top / 226
C	BF / 226 Bayonet
E	Flat Top / 222
D	Fin / 222

Code	Insert Option
N*	No Insert

*Omit if 316L stainless steel insert required

Code	Variant
P	Pharmaceutical

Code	O-rings
P	FEP Encapsulated Viton
K	Kalrez
C	Chemraz
S	Silicone

Parker domnick hunter has a continuous policy of product development and although the Company reserves the right to change specifications, it attempts to keep customers informed of any alterations. This publication is for general information only and customers are requested to contact our Process Filtration Sales Department for detailed information and advice on a products suitability for specific applications. All products are sold subject to the company's Standard conditions of sale.

Europe: +44 (0)191 4105121 dhprocess@parker.com - North America: +1 608 824 0500 dhpsales.na@parker.com www.parker.com/dhpharma

ENERGOEKONOM spol. s r.o., Wolkerova 433, CZ-250 82 Úvaly, Czech Republic, Tel.: +420 281 981 055, info@energoekonom.cz, www.energoekonom.cz

STEAM Filters

- steam filters
- 316L stainless steel

High quality steam for sterilization and heating purposes is a key element of many pharmaceutical manufacturing systems, ensuring effective and continuous operation of the process.

Parker domnick hunter STEAM filters are designed to provide high quality particulate removal in process steam (available with compliance to 3A Standard 609-03) together with high flow rates and dirt-holding capacity, thereby allowing long system lifetime and cost-effective operation.

Features and Benefits

- 316L stainless steel filter cartridges
- Exceptionally high flow rates
- Available in compliance with 3A Standard 609-03 (culinary grade) 1 micron
- High dirt holding capacity
- 'JUMBO' filter configuration ensures maximum utilization of pipework capacity

Which Filter for Which Application ?

Process Steam

- Direct from boiler
- No direct contact with product being manufactured

Applications

- General heating
- Steam jackets
- Bio waste kill systems

Cartridges

- Required if steam is used to sterilize liquid and gas cartridge filters
- Selection dependant on flow parameters

Sintered 25 µm
(Selection Criteria)

Use for relatively low flow rates

Pleated 5 µm
(Selection Criteria)

High flow rate and dirt holding capacity

Culinary Steam (3A Standard 609-03)

- 95% retention of >2 micron particles in the liquid phase
- Manufactured from 300 series stainless steel
- Any additives to the boiler feed should conform to CFR Title 21, Chapter 1, Part 173, Section 173.310

Applications

- Used in direct contact with food
- Direct contact with food processing equipment and HVAC systems

Cartridges

- Selection dependant on flow parameters

Sintered 1 µm
(Selection Criteria)

Use for relatively low flow rates

Culinary 1 µm
(Selection Criteria)

Used to maximize steam capacity of pipe

JUMBO Filters
(Selection Criteria)

Highest available capacity

Clean Steam (HTM 2031:1997)*

- Condensate to WFI standards

Applications

- Pharmaceutical products
- Pharmaceutical plant HVAC systems

Cartridges

- For removal of magnetite particles generated from stainless steel pipes due to corrosive purity of steam

HIGH FLOW TETPOR II
(Selection Criteria)

PTFE membrane 100% removal of magetite particles generated from stainless steel pipes

Culinary 1µm
(Selection Criteria)

To conform to HTM 2031 Point of Use filter rated at <5 µm

Specifications - PLEATED

Materials of Construction

- Filtration Media: 316L Stainless Steel
- Inner Support Core: 316L Stainless Steel
- Outer Support Cage: 316L Stainless Steel
- End Caps: 316L Stainless Steel
- Standard o-rings/gaskets: EPDM *(standard)*
  Silicone and Viton
  (options available)

Recommended Operating Conditions

The maximum differential pressure in direction of flow (outside to in) is 10 barg (145.03 psig).

The maximum differential pressure in direction of flow (in to outside) is 2 barg (29.00 psig).

The maximum recommended continuous operating temperature range is -75 °C (-103 °F) to +200 °C (392 °F).

Note: Temperature dependant on o-ring compound

Effective Filtration Area (EFA)

10" (250 mm) 0.15 m² (1.61 ft²)

Housing Materials of Construction

- Material: 316L Stainless Steel
- Surface Finish
  - Single Internal: Electropolished Ra 0.8
  - Single External: Mechanical Polish (Commercial Bright)
  - Jumbo Internal: Upstream - Beadblast Outlet Assembly - Linished 180 grit
  - Jumbo External: Beadblast
- Vent / Drain
  - Single / Jumbo: 1/4" BSPP Female Thread
- Seal Material: EPDM Aseptic Seal

Housing Design Pressure and Temperature

Single: 16 barg (232 psig) @ 200 °C (392 °F)

Jumbo: 7 barg (101 psig) @ 170 °C (338 °F)

1

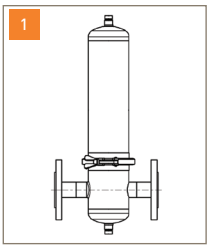

2

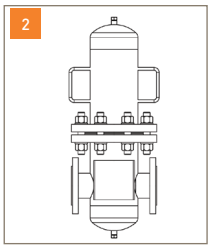

Figure	Housing Code	Connection Size	Capacity Kg / hr @ 1 barg	Overall Height	Replacement Filter Code
			<100 mbar or 40 m / sec		
1	HBAHP01KY	1.5" (38.1 mm)		14.8" (376 mm)	ZCHS-K-...C
1	HBAHP011C	2" (50.8 mm)	150	20.7" (526 mm)	ZCHS-1-....C
			280		
2	VISCE-01J-D	3" (50.8 mm)		30.0" (763 mm)	ZCHS-J-...3
2	VISCE-01J-E	4" (101.6 mm)	750	35.2" (895 mm)	ZCHS-J-...4
2	VISCE-03J-G	6" (152.4 mm)	1300	41.2" (1049 mm)	3 x ZCHS-J...3
2	VISCE-03J-H	8" (203.2 mm)	2300	48.7" (1237 mm)	3 x ZCHS-J-...4
			3750		

Note: For efficient steam distribution it is recommended that steam velocities are restricted to 25 m / sec⁻¹. For more information on the HBA range, please contact Parker domnick hunter.

Correction Factors

To use the table above, the steam flow rates must be at 1 barg (14.50 psig). For system flows at different line pressures, divide the system flow by the correction factor below to find the equivalent flow @ 1 barg (14.50 psig).

Steam Pressure	0	1	2	3	4	5	6	7	8	9	10
Correction Factor	0.5	1.0	1.5	2.0	2.5	3.0	3.5	4.0	4.5	5.0	5.5

Table showing the relative system size difference between pleated cartridges left and sintered cartridges right.

VISCE-01J-D
3" Inlet / Outlet
Mass Flow 780 Kg / hr
@ 1 barg

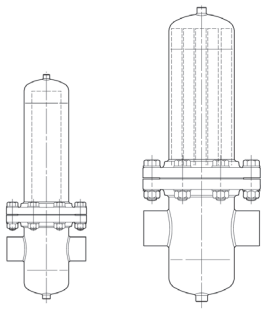

VISCE-01J-E
4" Inlet / Outlet
Mass Flow 1300 Kg / hr
@ 1 barg

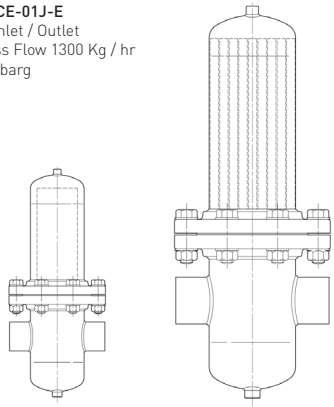

Specifications - SINTERED

Materials of Construction

- Filtration Media: Sintered Stainless Steel (316L)
- End Caps: Stainless Steel (316L)
- Standard o-rings/gaskets: EPDM *(standard)* Silicone and Viton *(options available)*

Recommended Operating Conditions

The maximum differential pressure in direction of flow (outside to in) is 10 barg (145.03 psig).

The maximum differential pressure in direction of flow (in to outside) is 5 barg (72.51 psig).

The maximum recommended continuous operating temperature range is -75 °C (-103 °F) to +200 °C (392 °F).

Note: Temperature dependant on o-ring compound

Housing Materials of Construction

- Material: 316L Stainless Steel
- Surface Finish
  - Internal: Electropolished Ra 0.8
  - External: Mechanical Polish (Commercial Bright)
- Vent / Drain: $^1/_4$" BSPP Female Thread (Supplied with Plug)
- Seal Material: EPDM Aseptic Seal

Housing Design Pressure and Temperature

16 barg (232 psig) @ 200 °C (392 °F)

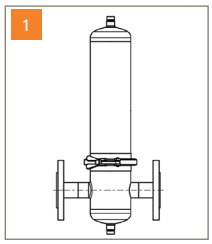

Figure	Housing Code	Connection Size	Capacity Kg / hr @ 1 barg <100 mbar or 40 m / sec 1 µm	25 µm	Overall Height	Replacement Filter Code
1	HBAHP01KY	1.5" (38.1 mm)	21	45	14.8" (376 mm)	ZCSSK-....C
1	HBAHP011C	2" (50.8 mm)	40	160	20.7" (526 mm)	ZCSS1-....C
1	HBAHP012C	2" (50.8 mm)	82	280	30.5" (776 mm)	ZCSS2-....C

Note: For efficient steam distribution it is recommended that steam velocities are restricted to 25 m / sec^{-1}. For more information on the HBA range, please contact Parker domnick hunter.

Correction Factors

To use the table above, the steam flow rates must be at 1 barg (14.50 psig). For system flows at different line pressures, divide the system flow by the correction factor below to find the equivalent flow @ 1 barg (14.50 psig).

Steam Pressure	0	1	2	3	4	5	6	7	8	9	10
Correction Factor	0.5	1.0	1.5	2.0	2.5	3.0	3.5	4.0	4.5	5.0	5.5

Ordering Information

SINTERED

ZCSS [ ] - [ ] [ ]

Code	Length (Nominal)	
B	2.5"	(65 mm)
A	5"	(125 mm)
K	5"	(125 mm)
1	10"	(250 mm)
2	20"	(500 mm)
3	30"	(750 mm)

All cartridges supplied as single items.

Code	Nominal Micron Rating (Steam)
001	1.0 µm (Culinary)
025	25.0 µm

Code	Endcap (10")
B	dh DOE
C	226 Bayonet

Code	Endcap (Demi)
T	TRUESEAL
Z	Demi A & B Std

PLEATED

ZCHS - [ ] - [ ] [ ]

Code	Length (Nominal)	
B	2.5"	(65 mm)
A	5"	(125 mm)
K	5"	(125 mm)
1	10"	(250 mm)
2	20"	(500 mm)
3	30"	(750 mm)
J	JUMBO	

All cartridges supplied as single items.

Code	Nominal Micron Rating (Steam)
001	1.0 µm (Culinary)
005	5.0 µm

Code	Endcap (10")
B	dh DOE
C	226 Bayonet
3	3" JUMBO
4	4" JUMBO

Code	Endcap (Demi)
T	TRUESEAL
Z	Demi A & B Std

SINTERED Stainless Steel Retrofit Cartridge Part Numbers - 1.0 µm & 25 µm

Parker domnick hunter Cartridge	DS-R 3/1	DS-R 3/1.4	DS-R 4/1.5	DS-R 4/2.5	DS-R 5/2.5	DS-R 5/3	DS-R 10/3	DS-R 15/3	DS-R 20/3	DS-R 30/3	DS-R 30/5
Retrofit Cartridge	GS3/1 SS3/1	GS3/1.5 SS3/1.5	GS4/1.5 SS4/1.5	GS4/2.5 SS4/2.5	GS5/2.5 SS5/2.5	GS5/3 SS5/3	GS10/3 SS10/3	GS15/3 SS15/3	GS20/3 SS20/3	GS30/3 SS30/3	GS30/5 SS30/5

Parker domnick hunter Cartridge	DS-R 02/05	DS-R 02/10	DS-R 03/05	DS-R 03/10	DS-R 04/10	DS-R 04/20	DS-R 05/20	DS-R 05/25	DS-R 07/25	DS-R 07/30	DS-R 10/30	DS-R 15/30	DS-R 20/30	DS-R 30/30	DS-R 30/50
Retrofit Cartridge	GS02/05 SS02/05	GS02/10 SS02/10	GS03/05 SS03/05	GS03/10 SS03/10	GS04/10 SS04/10	GS04/20 SS04/20	GS05/20 SS05/20	GS05/25 SS05/25	GS07/25 SS07/25	GS07/30 SS07/30	GS10/30 SS10/30	GS15/30 SS15/30	GS20/30 SS20/30	GS30/30 SS30/30	GS30/50 SS30/50

Parker domnick hunter Cartridge	PDS-R 02/05	PDS-R 02/10	PDS-R 03/05	PDS-R 03/10	PDS-R 04/10	PDS-R 04/20	PDS-R 05/20	PDS-R 05/25	PDS-R 07/25	PDS-R 07/30	PDS-R 10/30	PDS-R 15/30	PDS-R 20/30	PDS-R 30/30	PDS-R 30/50
Retrofit Cartridge	P-GS02/05 P-SS02/05	P-GS02/10 P-SS02/10	P-GS03/05 P-SS03/05	P-GS03/10 P-SS03/10	P-GS04/10 P-SS04/10	P-GS04/20 P-SS04/20	P-GS05/20 P-SS05/20	P-GS05/25 P-SS05/25	P-GS07/25 P-SS07/25	P-GS07/30 P-SS07/30	P-GS10/30 P-SS10/30	P-GS15/30 P-SS15/30	P-GS20/30 P-SS20/30	P-GS30/30 P-SS30/30	P-GS30/50 P-SS30/50

Specifications - SINTERED retrofit cartridges

Materials of Construction

- Filtration Media: Sintered Stainless Steel (316L)
- End Caps: Stainless Steel (316L)
- Standard o-rings/gaskets: EPDM *(standard)* Silicone and Viton *(options available)*

Recommended Operating Conditions

The maximum differential pressure in direction of flow (outside to in) is 10 barg (145.03 psig).

The maximum differential pressure in direction of flow (in to outside) is 5 barg (72.51 psig).

The maximum recommended continuous operating temperature range is -75 °C (-103 °F) to +200 °C (392 °F).

Note: Temperature dependant on o-ring compound

Ordering Information

SINTERED retrofit cartridges

Z [ ] [ ] [ ] [ ]

Code	Micron
P	1 micron
S	25 micron

All cartridges supplied as single items.

Code	Length (Nominal)		
02	2"	(65 mm)
03	3"	(125 mm)
04	4"	(125 mm)
05	5"	(250 mm)
07	7"	(500 mm)
10	10"	(750 mm)
15	15"	(750 mm)
20	20"	(750 mm)
30	30"	(750 mm)

Code	Diameter (Nominal)
05	1"
10	1"
20	2"
25	2.5"
30	3"
50	5"

Code	Endcap (10")
UP	2 x o-ring
UR	1 x o-ring & thread
UI	2 x o-ring & thread

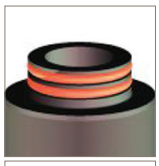
Code UP

Code UR

Code UI

Description	L	D
ZP/ZS 0310 UR	88	40
ZP/ZS 0315 UR	88	40
ZP/ZS 0415 UR	124	40
ZP/ZS 0425 UR	125	54
ZP/ZS 0525 UR	152	54
ZP/ZS 0530 UR	148	76
ZP/ZS 1030 UR	269	76
ZP/ZS 1530 UR	405	76
ZP/ZS 2030 UR	532	76
ZP/ZS 3030 UR	784	76
ZP/ZS 3050 UR	774	130

Diagram

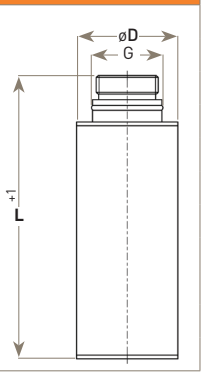

Description	L	D
ZP/ZS 0210 UP	-	
ZP/ZS 0310 UP	86	35
ZP/ZS 0305 UP	-	-
ZP/ZS 0410 UP	114	35
ZP/ZS 0420 UP	117	40
ZP/ZS 0520 UP	141	40
ZP/ZS 0525 UP	141	54
ZP/ZS 0725 UP	193	54
ZP/ZS 0730 UP	196	76
ZP/ZS 1030 UP	269	76
ZP/ZS 1530 UP	396	76
ZP/ZS 2030 UP	523	76
ZP/ZS 3030 UP	775	76
ZP/ZS 3050 UP	775	76

Diagram

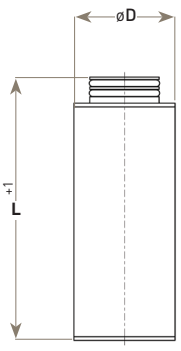

Description	L	D
ZP/ZS 0205 UI	75	35
ZP/ZS 0210 UI	93	35
ZP/ZS 0305 UI	89	35
ZP/ZS 0310 UI	93	35
ZP/ZS 0410 UI	121	35
ZP/ZS 0420 UI	127	40
ZP/ZS 0520 UI	151	40
ZP/ZS 0525 UI	151	54
ZP/ZS 0725 UI	203	54
ZP/ZS 0730 UI	206	76
ZP/ZS 1030 UI	279	76
ZP/ZS 1530 UI	406	76
ZP/ZS 2030 UI	533	76
ZP/ZS 3030 UI	785	76
ZP/ZS 3050 UI	785	130

Diagram

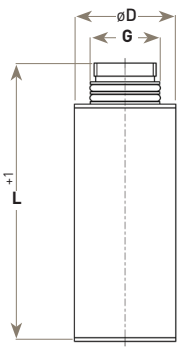

Europe: +44 (0)191 4105121 dhprocess@parker.com - North America: +1 608 824 0500 dhpsales.na@parker.com www.parker.com/dhpharma

Parker domnick hunter has a continuous policy of product development and although the Company reserves the right to change specifications, it attempts to keep customers informed of any alterations. This publication is for general information only and customers are requested to contact our Process Filtration Sales Department for detailed information and advice on a products suitability for specific applications. All products are sold subject to the company's Standard conditions of sale.

ENERGOEKONOM spol. s r.o., Wolkerova 433, CZ-250 82 Úvaly, Czech Republic, Tel.: +420 281 981 055, info@energoekonom.cz, www.energoekonom.cz

HSA Filter Housing

- sanitary air / gas

- Flow efficient sanitary range of air / gas housings to maximize the flow efficiency of the HIGH FLOW range of cartridges
- Designed specifically for the pharmaceutical industry
- Sanitary tri-clamp body closure
- STANDARD product
  - Sanitary connections and surface finish
- PLUS product
  - Available in 4 different vessel classes: Standard (CE), Atex, High Pressure and Oxygen Service
  - Sanitary and sanitary electropolished surface finishes available
  - Choice of gasket and seal materials

Specification

STANDARD Range
Materials of Construction

Housing:	316L Stainless Steel
Seals:	Silicone FDA
Clamps:	304 Stainless Steel

Surface Finish

Internal:	Polished 0.4 µm Ra (16 µIn Ra)
External:	Polished 0.25 µm Ra (10 µIn Ra)

All finishes pickled & passivated.

PLUS Range
Materials of Construction

Housing:	316L Stainless Steel
Seals:	EPDM FDA PTFE FDA Silicone FDA Viton FDA
Clamps:	304 Stainless Steel

Surface Finish

- Sanitary Finish
  Internal: Polished 0.4 µm Ra (16 µIn Ra)
  External: Polished 0.25 µm Ra (10 µIn Ra)

- Sanitary Electropolished Finish
  Internal: Polished 0.4 µm Ra (16 µIn Ra) and Electropolished
  External: Polished 0.25 µm Ra (10 µIn Ra)

Welding
All assembly welds are full penetration.
All welds are crevice and undercut free.
Weld finish & detail drawings available upon request.

Certification
Supplied as standard with vessel inspection certificate.

Material Test Certification
EN10204 3.1 supplied upon request.

Design Code
Housings designed in accordance with the European Council Pressure Equipment Directive (PED) 97/23/EC and the UK Statutory Pressure Equipment Regulations (PER) 1999 N° 2001.

PED / PER conformity assessments based on Fluid Group 2 Gas (harmless) including steam. Only housings over PS.V 50 bar / litres bear the CE mark.

Design Basis
ASME VIII Division 1.

Optional - Parker Hygienic Sanitary 85 Series Gaskets
Compressed Controlled, USP Class VI, FDA and NSPF Approved.

Benefits:
- Internal gasket bead and plastic outer part:
  - Enable excellent compression control for minimum intrusion and optimum cleaning, even after 500 steam cycles
  - Results in minimum gasket erosion *(could cause contamination downstream)*
- Easier part assembly, alignment and removal due to outer plastic outer part.
- Each gasket has identification number etched on the outer rim to allow full traceability

See product coding 'Accessories' at the end of this datasheet.

Standard Range

Working Condition PED 97/23/EC			Maximum Pressure				
Fluid Group	State	Temperature	01A	01B	01K	011	012
Non Dangerous	Gas / Vapour	150 °C (302 °F)	10.00 barg (145.03 psig)	10.00 barg (145.03 psig)	10.00 barg (145.03 psig)	10.00 barg (145.03 psig)	10.00 barg (145.03 psig)
Dangerous	Gas / Vapour	150 °C (302 °F)	10.00 barg (145.03 psig)	10.00 barg (145.03 psig)	8.00 barg (116.03 psig)	8.00 barg (116.03 psig)	8.00 barg (116.03 psig)
PED Conformity Assessment Category			SEP	SEP	SEP	SEP	SEP
Volume (litres)			0.75	0.5	1.9	3.1	5.0

Plus Range

ATEX	Working Condition PED 97/23/EC		Maximum Pressure						
Fluid Group	State	Temperature	01A	01B	01K	011	012	013	014
Non Dangerous	Gas / Vapour	135 °C (275 °F)	10.00 barg (145.03 psig)	10.00 barg (145.03 psig)	10.00 barg (145.03 psig)	10.00 barg (145.03 psig)	10.00 barg (145.03 psig)	10.00 barg (145.03 psig)	10.00 barg (145.03 psig)
Dangerous	Gas / Vapour	135 °C (275 °F)	8.00 barg (116.03 psig)	8.00 barg (116.03 psig)	8.00 barg (116.03 psig)	8.00 barg (116.03 psig)	8.00 barg (116.03 psig)	7.20 barg (104.42 psig)	5.60 barg (81.22 psig)
PED Conformity Assessment Category			SEP	SEP	SEP	CAT I	CAT I	CAT I	CAT I
Volume (litres)			0.75	0.5	1.9	3.1	5.0	6.9	8.8

CE	Working Condition PED 97/23/EC		Maximum Pressure						
Fluid Group	State	Temperature	01A	01B	01K	011	012	013	014
Non Dangerous	Gas / Vapour	150 °C (302 °F)	10.00 barg (145.03 psig)	10.00 barg (145.03 psig)	10.00 barg (145.03 psig)	10.00 barg (145.03 psig)	10.00 barg (145.03 psig)	10.00 barg (145.03 psig)	10.00 barg (145.03 psig)
Dangerous	Gas / Vapour	150 °C (302 °F)	10.00 barg (145.03 psig)	10.00 barg (145.03 psig)	8.00 barg (116.03 psig)	8.00 barg (116.03 psig)	8.00 barg (116.03 psig)	7.20 barg (104.42 psig)	5.60 barg (81.22 psig)
PED Conformity Assessment Category			SEP	SEP	SEP	SEP	CAT I	CAT I	CAT I
Volume (litres)			0.75	0.5	1.9	3.1	5.0	6.9	8.8

High Pressure	Working Condition PED 97/23/EC		Maximum Pressure						
Fluid Group	State	Temperature	01A	01B	01K	011	012	013	014
Non Dangerous	Gas / Vapour	205 °C (401 °F)	16.00 barg (232.06 psig)	16.00 barg (232.06 psig)	16.00 barg (232.06 psig)	16.00 barg (232.06 psig)	16.00 barg (232.06 psig)	16.00 barg (232.06 psig)	16.00 barg (232.06 psig)
PED Conformity Assessment Category			SEP	SEP	SEP	SEP	CAT I	CAT I	CAT I
Volume (litres)			0.75	0.5	1.9	3.1	5.0	6.9	8.8

Oxygen Service	Working Condition PED 97/23/EC		Maximum Pressure						
Fluid Group	State	Temperature	01A	01B	01K	011	012	013	014
Dangerous	Gas / Vapour	150 °C (302 °F)	10.00 barg (145.03 psig)	10.00 barg (145.03 psig)	8.00 barg (116.03 psig)	8.00 barg (116.03 psig)	8.00 barg (116.03 psig)	7.20 barg (104.42 psig)	5.60 barg (81.22 psig)
PED Conformity Assessment Category			SEP	SEP	SEP	SEP	CAT I	CAT I	CAT I
Volume (litres)			0.75	0.5	1.9	3.1	5.0	6.9	8.8

Note: All housings are fully vacuum rated.

Membrane Filters
HIGH FLOW TETPOR II

Food and Beverage sterile air / particulate free filtration

Sterile Air / ISO 8573.1:2001 - Class 1 Particulate Removal

Full retention of bacteria, viruses and particulate. Based on membrane technology. Retention correlated to a liquid bacterial challenge (ASTM 383-05) as well as bacterial and viral aerosol challenge. Used for the most critical of applications including medical, pharmaceutical / aseptic packaging and electronics.

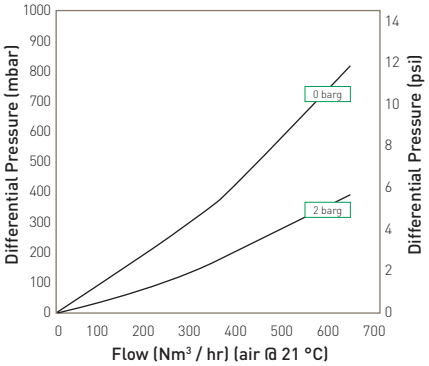

Flow rates for other sizes available upon request

10¨ Size (250 mm) Cartridge
2¨ Line Size Housing

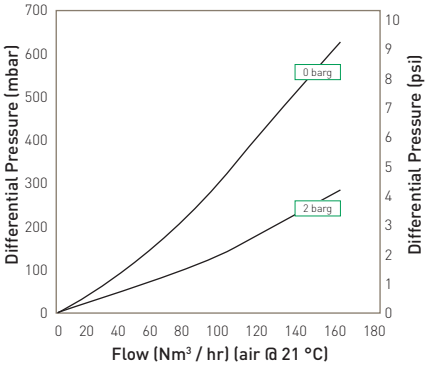

Flow rates for other sizes available upon request

A Size (125 mm) Cartridge
1¨ Line Size Housing

Depth Filters
HIGH FLOW BIO-X

Proven depth filter technology and pleated construction to provide retention down to 0.01 micron in gas.

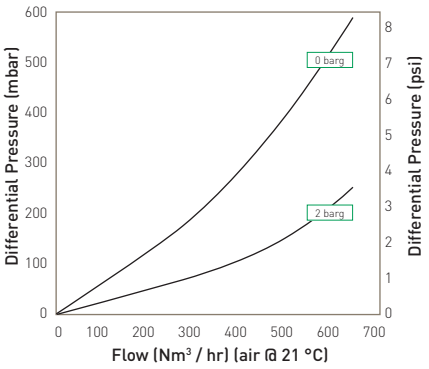

Flow rates for other sizes available upon request

10¨ Size (250 mm) Cartridge
2¨ Line Size Housing

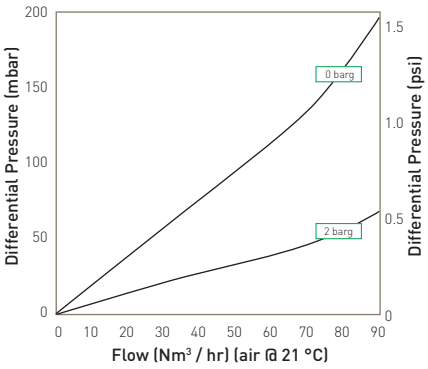

Flow rates for other sizes available upon request

A Size (125 mm) Cartridge
1¨ Lines Size Housing

Flow Correction Factors

Line Pressure	barg	1	2	3	4	5	6	7	8	9	10	11	12	13	14	15	16
	psig	15	29	44	58	73	87	100	116	131	145	160	174	189	203	218	232
Correction Factor		0.4	0.5	0.65	0.75	0.85	0.95	1	1.15	1.25	1.40	1.50	1.60	1.75	1.90	2.00	2.15

Physical Characteristics

Bowl Height	Dimensions 'A'	Dimensions 'B'	Dimensions 'C'	Typical Weight
A Size 125 mm (5¨)	152 mm (6.0¨)	227 mm (9.0¨)	130 mm (5.1¨)	1.3 Kg (2.86 lbs)
B Size 65 mm (2 1/2¨)	152 mm (6.0¨)	172 mm (6.8¨)	70 mm (2.8¨)	1.2 Kg (2.64 lbs)
125 mm (5¨)	157 mm (6.2¨)	337 mm (13.3¨)	194 mm (7.6¨)	5.1 Kg (11.22 lbs)
250 mm (10¨)	157 mm (6.2¨)	487 mm (19.2¨)	313 mm (12.3¨)	5.7 Kg (12.54 lbs)
500 mm (20¨)	157 mm (6.2¨)	737 mm (29.0¨)	561 mm (22.1¨)	6.7 Kg (14.74 lbs)

Dimensions shown are based on the STANDARD range. For accurate dimensions, please contact Parker domnick hunter.

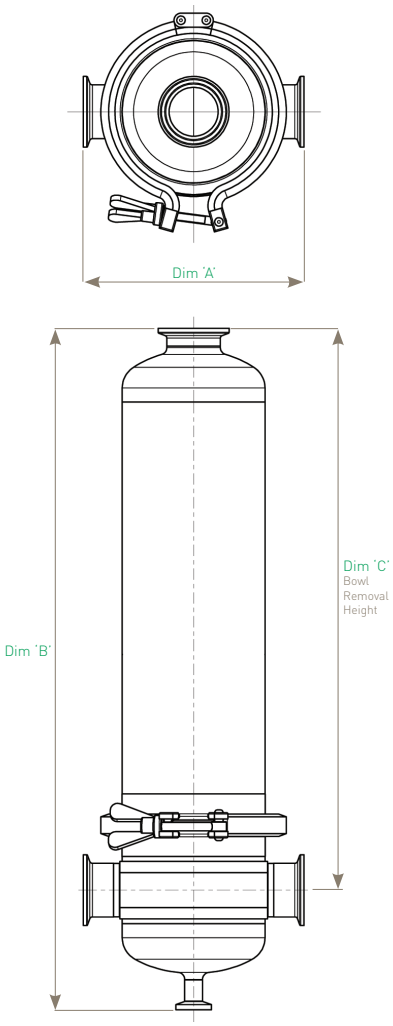

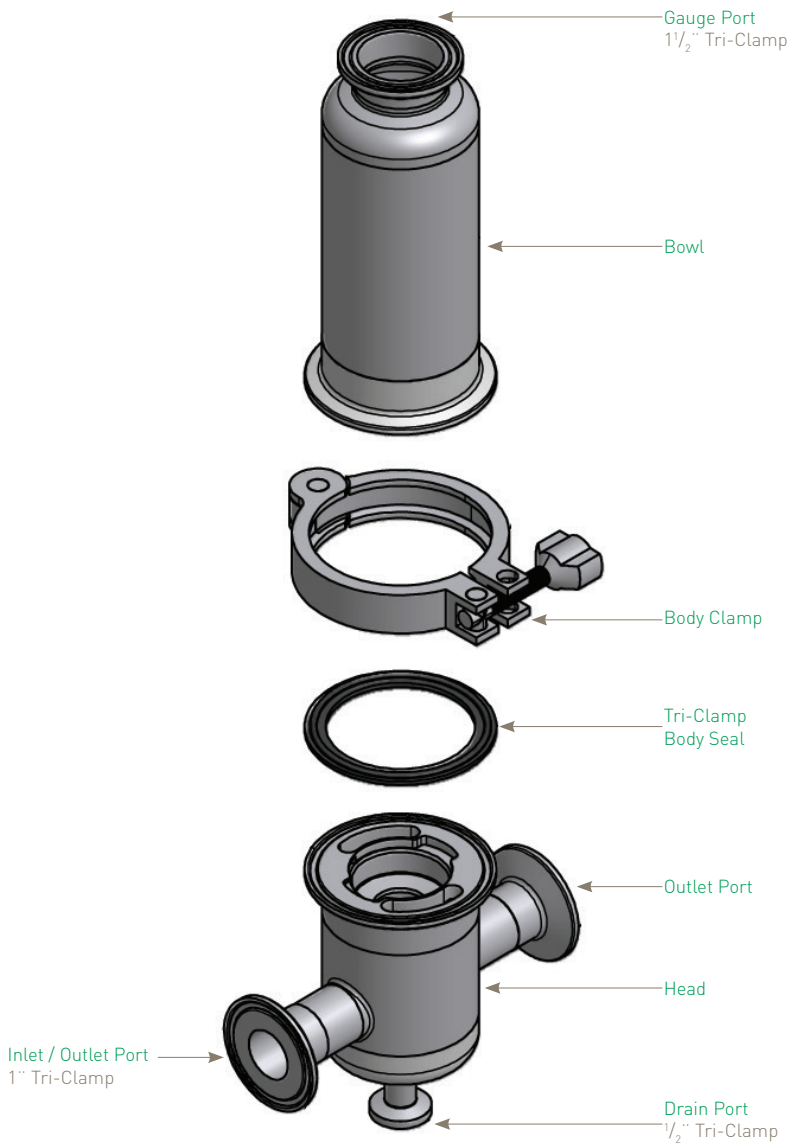

Example: Showing Demi A Size with 1¨ connections

The PLUS product range is available with many options of connections, vents, drains, surface finish, seals classification, etc. Please see product coding.

STANDARD Range - K to 20¨

HSA [ ] 01 [ ] [ ] [ ] - [ ] - [ ]

Code	Vessel Class
CE	Standard

Code	Length (Nominal)
K	5¨ (125 mm)
1	10¨ (250 mm)
2	20¨ (500 mm)

Code	Connection Size
Y	1 1/2¨ (38.1 mm)

Code	Standard
T	Tri-Clamp

Code	Cartridge
C	226

Code	Seal
S	Silicone

Delivery Key

[ ] Standard delivery times

[ ] PLUS delivery times

STANDARD Range - Demi A & B

HSA [ ] 01 [ ] [ ] [ ] - [ ] - [ ]

Code	Vessel Class
CE	Standard

Code	Length (Nominal)
A	5¨ (125 mm)
B	2 1/2¨ (65 mm)

Code	Connection Size
B	1¨

Code	Standard
T	Tri-Clamp

Code	Cartridge
T	126

Code	Seal
S	Silicone

PLUS Range - K to 40¨

HSA [ ] 01 [ ] [ ] [ ] [ ] [ ] - [ ] [ ] - [ ] - [ ]

Code	Vessel Class
CE	Standard
HP*	High Pressure
AT	ATEX
OX	Oxygen Service

* Supplied complete with a double bolted clamp

Code	Length (Nominal)
K	5¨ (125 mm)
1	10¨ (250 mm)
2	20¨ (500 mm)
3	30¨ (750 mm)
4	40¨ (1000 mm)

Code	Connection Size
Y	1 1/2¨ (38.1 mm)
C	2¨ (50.8 mm)

Code	Standard
T	Tri-Clamp

Code	Cartridge
C	226

Code	Seal
E	EPDM
P*	PTFE
S	Silicone
V	Viton

* Double bolted clamp required

Code	Vent
T	1 1/2¨ TCF Only
C	Rectus 21 Vertical
H	1 1/2¨ TCF & Hosebarb
I	1 1/2¨ TCF & Staubli RBE03
M	1 1/2¨ TCF & 1/2¨ TCF
R	1 1/2¨ TCF & Rectus 21
S	Staubli RBE03 Vertical

Code	Drain
T	1/2¨ TCF
H	Hosebarb
R	Rectus 21
S	Staubli RBE03

Code	Surface Finish	Internal	External
B	Sanitary	0.4 µm	0.25 µm
P	Sanitary Electropolished	0.4 µm EP	0.25 µm

Code	Tagged
X	No
T	Yes

For Tagged Options customer identification numbers required at time of ordering

PLUS Range - Demi A & B

HSA [ ] 01 [ ] [ ] [ ] [ ] [ ] - [ ] [ ] - [ ] - [ ]

Code	Vessel Class
CE	Standard
HP*	High Pressure
AT	ATEX
OX	Oxygen Service

* Supplied complete with a double bolted clamp

Code	Length (Nominal)
A	5¨ (125 mm)
B	2 1/2¨ (65 mm)

Code	Connection Size
B	1¨
T	3/4¨
A	1/2¨

Code	Standard
T	Tri-Clamp

Code	Cartridge
T	126

Code	Seal
E	EPDM
P*	PTFE
S	Silicone
V	Viton

* Double bolted clamp required

Code	Vent
T	1 1/2¨ TCF Only
C	Rectus 21 Vertical
H	1 1/2¨ TCF & Hosebarb
I	1 1/2¨ TCF & Staubli RBE03
M	1 1/2¨ TCF & 1/2¨ TCF
R	1 1/2¨ TCF & Rectus 21
S	Staubli RBE03 Vertical

Code	Drain
T	1/2¨ TCF
H	Hosebarb
R	Rectus 21
S	Staubli RBE03

Code	Surface Finish	Internal	External
B	Sanitary	0.4 µm	0.25 µm
P	Sanitary Electropolished	0.4 µm EP	0.25 µm

Code	Tagged
X	No
T	Yes

For Tagged Options customer identification numbers required at time of ordering

Accessories (Other accessories available upon request)

85 Series Parker Hygienic Seals

Type B design, over moulded rubber to plastic clip design.

85 [ ] - [ ] - [ ]

Code	Diameter
16	1¨
24	1.5¨
32	2¨
40	2.5¨
48	3¨
64	4¨

Code	Rubber Material
1	Silicone / Rust
2	FKM / Black
3	EPDM / White
4	Nitrile / Black
5	Silicone / Clear
6	EPDM / Black

Code	Plastic Material
B	Blue
R	Red

Standard Housing Gaskets - Kits (Qty = 1)

Code	Demi Range
XGKEP08NA	2.5¨ Tri-Gasket EPDM
XGKSI08	2.5¨ Tri-Gasket Silicone
XGKVI08SA	2.5¨ Tri-Gasket FKM
XGKPT10SA	2.5¨ Tri-Gasket PTFE
XGKPT08SA	2.5¨ Tri-Gasket PTFE TUF-FLEX

Code	K - 40¨ Range
XTSEP10IL	4¨ Tri-Gasket EPDM
XTSSI10SL	4¨ Tri-Gasket Silicone
XTSVI10SL	4¨ Tri-Gasket FKM
XTSPT10SL	4¨ Tri-Gasket PTFE
XGKPT10SA1	4¨ Tri-Gasket PTFE TUF-FLEX

For further information on Parker hygienic gaskets for TUF-FLEX gaskets, please request datasheets.

Code	Main Spare Parts Kits
XTCSS08SA	Demi 2.5¨ clamp Standard 10 barg - single pin
XTCSS08TC	Demi 2.5¨ clamp HP high pressure - double bolt
XTCSS10SL	Demi 4¨ clamp Standard 10 barg - single pin
XTCSS10HP15	Demi 4¨ clamp HP high pressure - double bolt
XPGSS06TC4	Sanitary gauge 1.5¨ Tri-Clamp (ISO2852) connection 10 barg
XVASS04TC6	Diaphragm drain valve 1/2¨ Tri-Clamp - silicone

For further information on these and other spares and accessories, please request datasheets.

Parker domnick hunter has a continuous policy of product development and although the Company reserves the right to change specifications, it attempts to keep customers informed of any alterations. This publication is for general information only and customers are requested to contact our Process Filtration Sales Department for detailed information and advice on a products suitability for specific applications. All products are sold subject to the company's Standard conditions of sale.

Europe: +44 (0)191 4105121 dhprocess@parker.com - North America: +1 608 824 0500 dhpsales.na@parker.com www.parker.com/dhpharma

ENERGOEKONOM spol. s r.o., Wolkerova 433, CZ-250 82 Úvaly, Czech Republic, Tel.: +420 281 981 055, info@energoekonom.cz, www.energoekonom.cz

Demi HSA⊕ Z Style Filter Housing

- sanitary air / gas

Parker domnick hunter

- Flow efficient range of air / gas housings
- Available in 4 different housing classes: Standard (CE), Atex, High Pressure & Oxygen Service
- Sanitary and sanitary electropolished surface finishes available
- A choice of connections, vents, drains, gaskets & surface finishes
- Parker domnick hunter 'Z' location

(PLUS product only - no STANDARD range)

Specification

Materials of Construction

- Housing: 316L Stainless Steel
- Body Seal: EPDM FDA
  PTFE FDA
  Silicone FDA
  Viton FDA
- Vent / Drain Seal: PTFE FDA

Surface Finish Options

- Sanitary
  Internal: Polished 0.4 µm Ra (16 µIn Ra)
  External: Polished 0.25 µm Ra (10 µIn Ra)
- Sanitary Electropolished
  Internal: Polished 0.4 µm Ra (16 µIn Ra) and Electropolished
  External: Polished 0.25 µm Ra (10 µIn Ra)

Welding

All assembly welds are full penetration.
All welds are crevice and undercut free.
Weld finish & detail drawings available upon request.

Design Code

Housings designed in accordance with the European Council Pressure Equipment Directive (PED) 97/23/EC and the UK Statutory Pressure Equipment Regulations (PER) 1999 N° 2001.

Design Basis

ASME VIII Division 1.
ATEX 94/9/EC *(where applicable)*

ATEX Working Condition PED 97/23/EC			Maximum Pressure	
Fluid Group	State	Temperature	01A	01B
Non Dangerous & Dangerous	Gas / Vapour	135 °C (275 °F)	10.00 barg (145.03 psig)	10.00 barg (145.03 psig)
PED Conformity Assessment Category			SEP	SEP
Volume (litres)			0.75	0.50

CE Working Condition PED 97/23/EC			Maximum Pressure	
Fluid Group	State	Temperature	01A	01B
Non Dangerous & Dangerous	Gas / Vapour	150 °C (302 °F)	10.00 barg (145.03 psig)	10.00 barg (145.03 psig)
PED Conformity Assessment Category			SEP	SEP
Volume (litres)			0.75	0.50

High Pressure Working Condition PED 97/23/EC			Maximum Pressure	
Fluid Group	State	Temperature	01A	01B
Non Dangerous	Gas / Vapour	205 °C (401 °F)	16.00 barg (232.06 psig)	16.00 barg (232.06 psig)
PED Conformity Assessment Category			SEP	SEP
Volume (litres)			0.75	0.50

Oxygen Service Working Condition PED 97/23/EC			Maximum Pressure	
Fluid Group	State	Temperature	01A	01B
Dangerous	Gas / Vapour	150 °C (302 °F)	10.00 barg (145.03 psig)	10.00 barg (145.03 psig)
PED Conformity Assessment Category			SEP	SEP
Volume (litres)			0.75	0.50

Note: All housings are fully vacuum rated.

Physical Characteristics

Bowl Height		Dimensions (mm) 'A' Weld	Tri-Clamp	BSP/NPT	'B'	'C'	Typical Weight (KG)
A Size	5" (125 mm)	106	149	172	295	177	1.5
B Size	2 1/2" (65 mm)	106	149	172	240	122	1.4

Dimensions are based on illustration shown.
For accurate dimensions, please contact Parker domnick hunter.

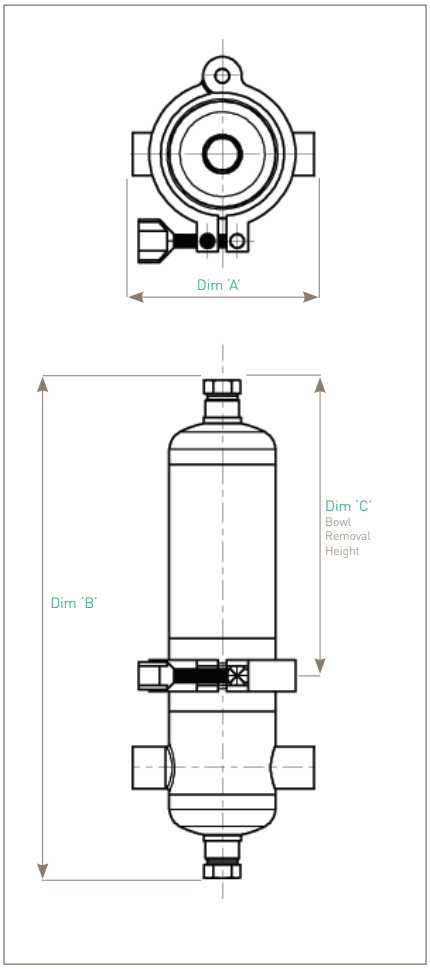

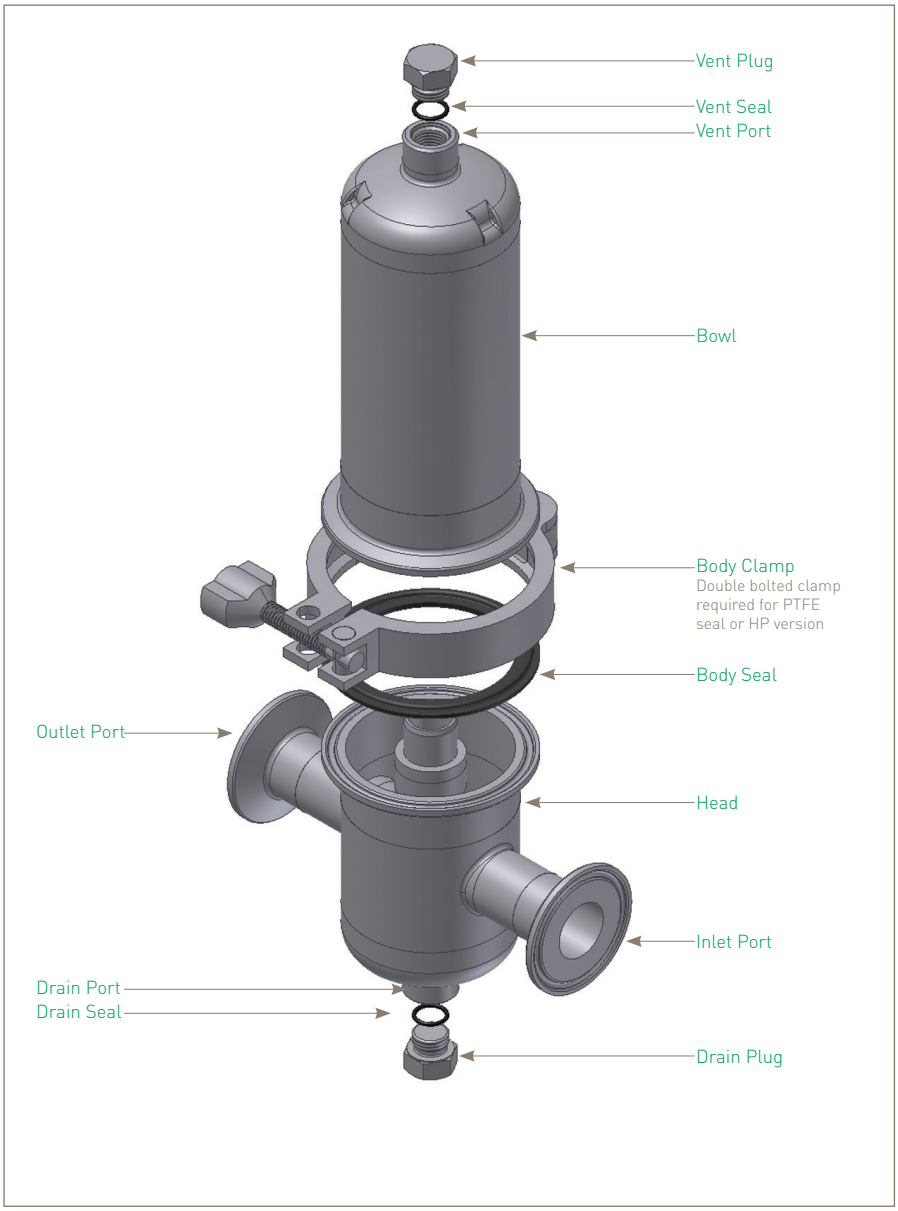

Ordering Information

HSA [ ] 01 [ ] [ ] [ ] [ ] [ ] - [ ] [ ] - [ ] - [ ]

Code	Vessel Class
CE	Standard
AT	ATEX
HP	High Pressure
OX	Oxygen Service

Code	Length (Nominal)
A	5" (125 mm)
B	2 1/2" (65 mm)

Code	Connection Size
B	1"

Code	Standard
B	BSPP (F)
N	NPT (F)
T	Tri-Clamp
W	ISO / BS Pipe

Code	Cartridge
Z	116

Code	Seal
E	EPDM
P*	PTFE
S	Silicone
V	Viton

** Double bolted clamp required*

Code	Vent
B	1/4" BSPP (F)
N	1/4" NPT (F)

Code	Drain
B	1/4" BSPP
N	1/4" NPT

Code	Surface Finish	Internal	External
B	Sanitary	0.4 µm	0.25 µm
P	Sanitary Electropolished	0.4 µm EP	0.25 µm

Code	Tagged
T	Yes
X	No

For Tagged Options customer identification numbers required at time of ordering

Parker domnick hunter has a continuous policy of product development and although the Company reserves the right to change specifications, it attempts to keep customers informed of any alterations. This publication is for general information only and customers are requested to contact our Process Filtration Sales Department for detailed information and advice on a products suitability for specific applications. All products are sold subject to the company's Standard conditions of sale.

Europe: +44 (0)191 4105121 dhprocess@parker.com - North America: +1 608 824 0500 dhpsales.na@parker.com www.parker.com/dhpharma

ENERGOEKONOM spol. s r.o., Wolkerova 433, CZ-250 82 Úvaly, Czech Republic, Tel.: +420 281 981 055, info@energoekonom.cz, www.energoekonom.cz

HSV Filter Housings

- vent applications

- Direct connection to tank boss allows housing to be self-supportive
- Easy assembly and maintenance
- STANDARD product
  - Standard surface finish & tri-clamp connection
- PLUS product
  - Available as STANDARD or for Atex applications
  - Standard, sanitary and sanitary electropolished surface finishes available
  - Connection choices

(Also see HSVLP (L-Port) Datasheet)

Specification

STANDARD Range
Materials of Construction

- Housing: 316L Stainless Steel
- Seals: Silicone FDA
- Clamps: 304 Stainless Steel

Surface Finish

- Internal: As welded
- External: Polished 0.8 µm (32 µIn Ra)

All finishes pickled & passivated.

PLUS Range
Materials of Construction

- Housing: 316L Stainless Steel
- Seals: EPDM FDA
  PTFE FDA
  Silicone FDA
  Viton FDA

Note: Seal used only to position bowl clamp arrangement.

- Clamps: 304 Stainless Steel

Surface Finish

- Standard Finish
  Internal: As Welded
  Pickled & Passivated
  External: Polished 0.8 µm Ra (32 µIn Ra)
- Sanitary Finish
  Internal: Polished 0.4 µm Ra (16 µIn Ra)
  External: Polished 0.25 µm Ra (10 µIn Ra)
- Sanitary Electropolished Finish
  Internal: Polished 0.4 µm Ra (16 µIn Ra) and Electropolished
  External: Polished 0.25 µm Ra (10 µIn Ra)

Welding

All assembly welds are full penetration.
All welds are crevice and undercut free.

Weld finish & detail drawings available upon request.

Certification

Supplied as standard with vessel inspection certificate.

Material Test Certification

EN10204 3.1 supplied upon request.

Recommended Operation Guidelines Sizing

Sizing vent vessels particularly for vacuum sensitive tanks can require specialist advice. It is important that VENT housings are sized on maximum gas flow capacity under actual operation conditions.

Vacuum Protection

Where a tank is vacuum sensitive, there is a risk of tank collapse. In such cases the fitting of an appropriately rated bursting disc (or similar) and, if necessary a pressure relief valve, is highly recommended.

Physical Characteristics

Bowl Height	Dimensions (mm) 'A'	'B'	'C'	Typical Weight
A Size 125 mm (5¨)	75 mm (2.9¨)	195 mm (7.7¨)	130 mm (5.1¨)	1.0 Kg (2.2lbs)
B Size 65 mm (2½¨)	75 mm (2.9¨)	140 mm (5.5¨)	70 mm (2.8¨)	0.9 Kg (1.9lbs)
125 mm (5¨)	132 mm (5.2¨)	242 mm (9.5¨)	194 mm (7.6¨)	2.2 Kg (4.8 lbs)
250 mm (10¨)	132 mm (5.2¨)	392 mm (15.4¨)	313 mm (12.3¨)	2.8 Kg (6.1 lbs)
500 mm (20¨)	132 mm (5.2¨)	642 mm (25.3¨)	561 mm (22.1¨)	3.8 Kg (8.3 lbs)
750 mm (30¨)	132 mm (5.2¨)	890 mm (35.0¨)	809 mm (31.8¨)	4.8 Kg(10.6 lbs)
1000 mm (40¨)	132 mm (5.2¨)	1138 mm (44.8¨)	1057 mm (41.6¨)	5.8 Kg(12.8 lbs)

Dimensions shown are based on the STANDARD range. For accurate dimensions, please contact Parker domnick hunter.

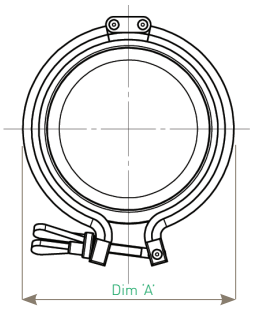

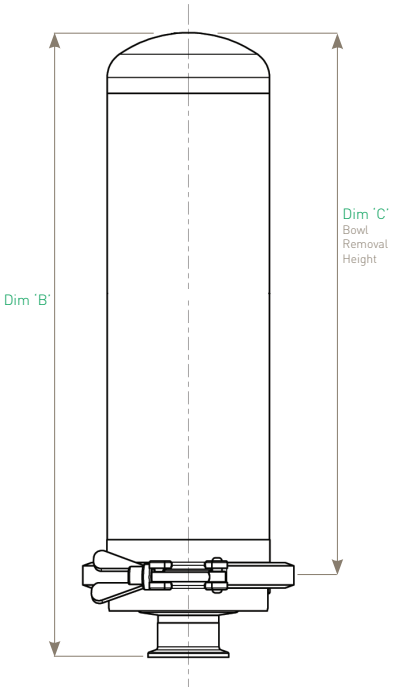

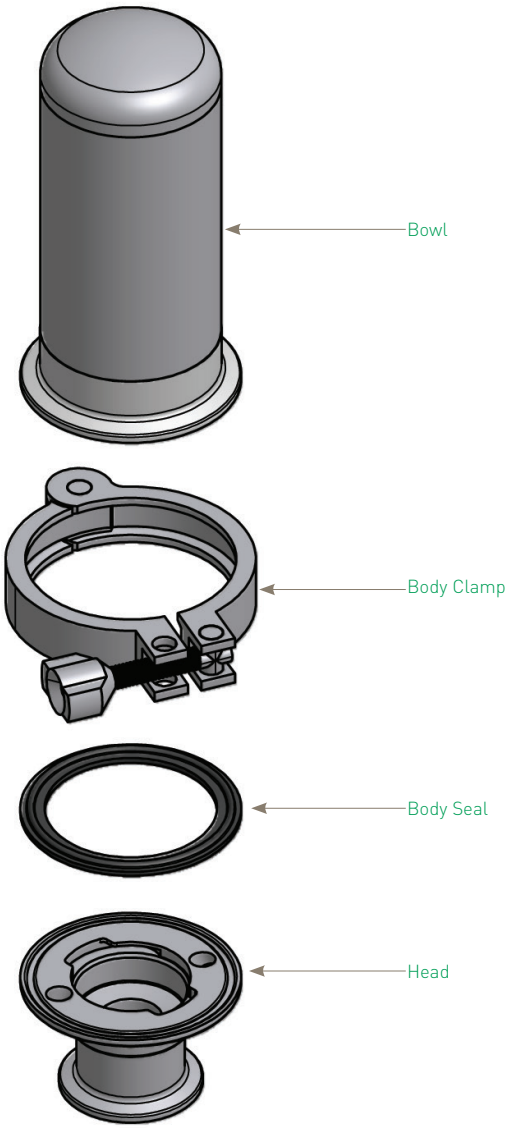

Example: Showing Demi A Size with 1¨ connections

The PLUS product range is available with many options of connections, vents, drains, surface finish, seals classification, etc. Please see product coding.

Note: All housings are fully vacuum rated.

STANDARD Range - K to 20¨

HSV 01 [ ] [ ] [ ] - [ ] - [ ]

Code	Vessel Class
DH	Vent Housing

Code	Length (Nominal)
K	5¨ (125 mm)
1	10¨ (250 mm)
2	20¨ (500 mm)

Code	Connection Size
Y	1½¨ (38.1 mm)

Code	Standard
T	Tri-Clamp

Code	Cartridge
C	226

Code	Seal
S	Silicone

STANDARD Range - Demi A & B

HSV 01 [ ] [ ] [ ] - [ ] - [ ]

Code	Vessel Class
DH	Vent Housing

Code	Length (Nominal)
A	5¨ (125 mm)
B	2½¨ (65 mm)

Code	Connection Size
B	1¨ (25.4 mm)

Code	Standard
T	Tri-Clamp

Code	Cartridge
T	126

Code	Seal
S	Silicone

PLUS Range - K to 40¨

HSV 01 [ ] [ ] [ ] [ ] [ ] [ ] [ ] - [ ] - [ ]

Code	Vessel Class
DH	Standard
AT	ATEX

Code	Length (Nominal)
K	5¨ (125 mm)
1	10¨ (250 mm)
2	20¨ (500 mm)
3	30¨ (750 mm)
4	40¨ (1000 mm)

Code	Connection Size
C	2¨ (50.8 mm)
Y	1½¨ (38.1 mm)

Code	Standard
B	BSPP (F)
D	DIN11851(M)
F	ANSI RF150
L	BS4504
	DIN2633
N	NPT (F)
T	Tri-Clamp
W	BS / ISO Pipe

Code	Cartridge
C	226

Code	Seal
E	EPDM
P	PTFE
S	Silicone
V	Viton

Code	Surface Finish	Internal	External
B	Sanitary	0.4 µm	0.25 µm
I	Standard	As Welded	0.8 µm
P	Sanitary Electropolished	0.4 µm EP	0.25 µm

Code	Tagged
T	Yes
X	No

For Tagged Options customer identification numbers required at time of ordering

PLUS Range - Demi A & B

HSV 01 [ ] [ ] [ ] [ ] [ ] [ ] [ ] - [ ] - [ ]

Code	Vessel Class
DH	Standard
AT	ATEX

Code	Length (Nominal)
A	5¨ (125 mm)
B	2½¨ (65 mm)

Code	Connection Size
B	1¨ (25.4 mm)

Code	Standard
B	BSPP (F)
D	DIN11851
F	ANSI RF150
L	BS4504
	DIN2633
N	NPT (F)
T	Tri-Clamp

Code	Cartridge
T	126

Code	Seal
E	EPDM
P	PTFE
S	Silicone
V	Viton

Code	Surface Finish	Internal	External
B	Sanitary	0.4 µm	0.25 µm
I	Standard	As Welded	0.8 µm
P	Sanitary Electropolished	0.4 µm EP	0.25 µm

Code	Tagged
T	Yes
X	No

For Tagged Options customer identification numbers required at time of ordering

Europe: +44 (0)191 4105121 dhprocess@parker.com - North America: +1 608 824 0500 dhpsales.na@parker.com www.parker.com/dhpharma

Parker domnick hunter has a continuous policy of product development and although the Company reserves the right to change specifications, it attempts to keep customers informed of any alterations. This publication is for general information only and customers are requested to contact our Process Filtration Sales Department for detailed information and advice on a products suitability for specific applications. All products are sold subject to the company's Standard conditions of sale.

ENERGOEKONOM spol. s r.o., Wolkerova 433, CZ-250 82 Úvaly, Czech Republic, Tel.: +420 281 981 055, info@energoekonom.cz, www.energoekonom.cz

HSVLP Filter Housings

- L configuration vent

- Sanitary vent housing - L Port configuration
- Tri-clamp or weld end connection
- Standard, sanitary and sanitary electropolished surface finishes available
- Wide range of vents and drains
- Choice of gasket and seal materials

Specification

Materials of Construction

- Housing: 316L Stainless Steel
- Seals: EPDM FDA
  PTFE FDA
  Silicone FDA
  Viton FDA

  Note: Seal used only to position bowl clamp arrangement.
- Clamps: 304 Stainless Steel

Surface Finish

- Standard Finish
  Internal: As Welded
  Pickled & Passivated
  External: Polished 0.8 µm Ra (32 µIn Ra)
- Sanitary Finish
  Internal: Polished 0.4 µm Ra (16 µIn Ra)
  External: Polished 0.25 µm Ra (10 µIn Ra)
- Sanitary Electropolished Finish
  Internal: Polished 0.4 µm Ra (16 µIn Ra) and Electropolished
  External: Polished 0.25 µm Ra (10 µIn Ra)

Welding

All assembly welds are full penetration.
All welds are crevice and undercut free.

Weld finish & detail drawings available upon request.

Working Condition PED 97/23/EC			Maximum Pressure				
Fluid Group	State	Temperature	01K	011	012	013	014
Standard	Gas / Vapour	150 °C (302 °F)	10.00 barg (145.03 psig)	10.00 barg (145.03 psig)	10.00 barg (145.03 psig)	10.00 barg (145.03 psig)	10.00 barg (145.03 psig)
Volume (litres)			1.6	2.8	4.7	6.6	8.5

Note: All housings are fully vacuum rated.

Physical Characteristics

Bowl Height	Dimensions (mm) 'A'	'B'	'C'	Typical Weight
125 mm (5")	190 mm (7.5")	213 mm (8.4")	216 mm (8.5")	3.3 Kg (7.3 lbs)
250 mm (10")	340 mm (13.4")	363 mm (14.3")	366 mm (14.4")	3.9 Kg (8.6 lbs)
500 mm (20")	590 mm (23.2")	613 mm (24.1")	616 mm (24.3")	4.9 Kg (10.8 lbs)
750 mm (30")	835 mm (32.9")	858 mm (33.8")	861 mm (33.9")	5.9 Kg (13.0 lbs)
1000 mm (40")	1085 mm (42.7")	1108 mm (43.6")	1111 mm (53.7")	6.9 Kg (15.2 lbs)

Dimensions shown are based on the STANDARD range. For accurate dimensions, please contact Parker domnick hunter.

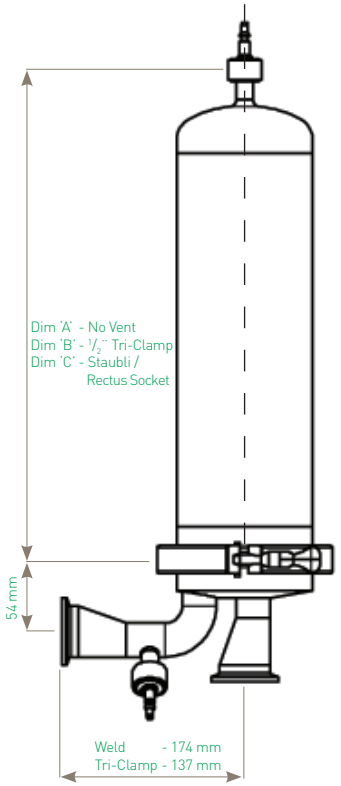

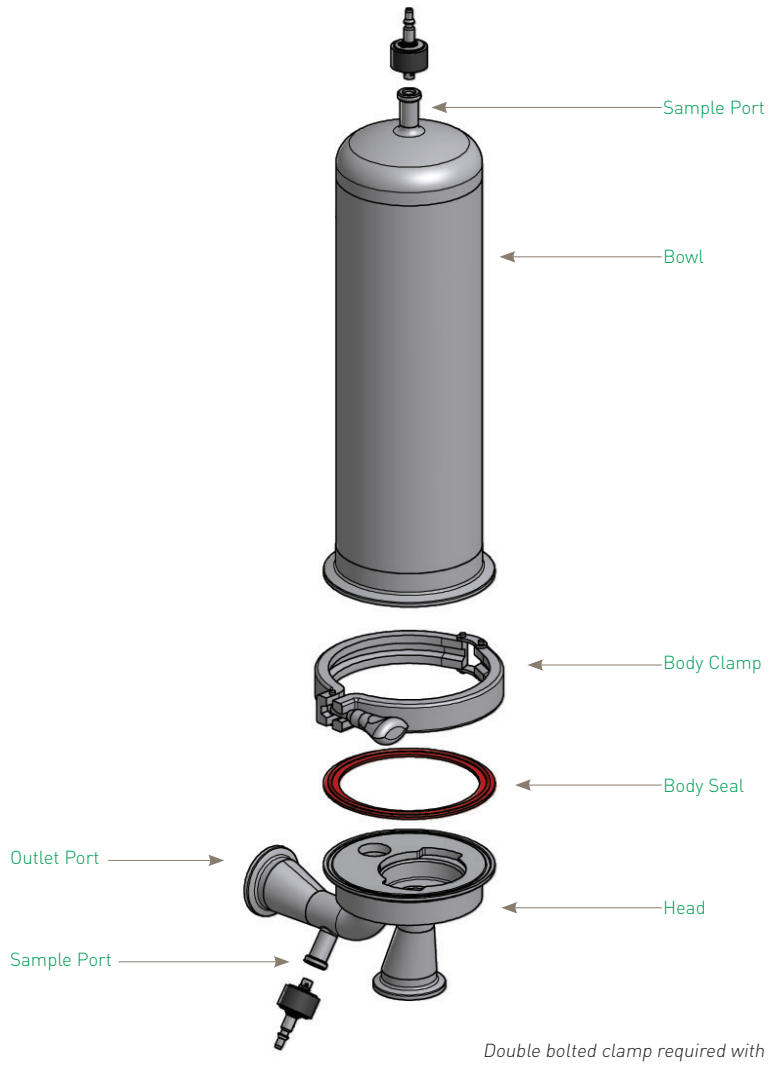

Double bolted clamp required with PTFE seal

Ordering Information

HSVLP 01 [ ] [ ] [ ] [ ] [ ] - [ ] [ ] - [ ] - [ ]

Code	Length (Nominal)
K	5" (125 mm)
1	10" (250 mm)
2	20" (500 mm)
3	30" (750 mm)
4	40" (1000 mm)

Code	Connection Size
Y	1 1/2" (38.1 mm)

Code	Standard
T	Tri-Clamp
W	BS / ISO Pipe

Code	Cartridge
C	226

Code	Seal
E	EPDM
P*	PTFE
S	Silicone
V	Viton

*Double bolted clamp must be used with PTFE seal

Code	Vent
H	1 1/2" TCF & Hosebarb
R	1 1/2" TCF & Rectus 21
S	Staubli RBE03 Vertical
T	1 1/2" TCF Only
X	No Vent

Code	Drain
H	Hosebarb Inlet
R	Rectus 21 Inlet
S	Staubli RBE03
T	1/2" Tri-Clamp Inlet
X	No Drain

Code	Surface Finish	Internal	External
B	Sanitary	0.4 µm	0.25 µm
I	Standard	As Welded	0.8 µm
P	Sanitary Electropolished	0.4 µm EP	0.25 µm

Code	Tagged
T	Yes
X	No

For Tagged Options customer identification numbers required at time of ordering

Parker domnick hunter has a continuous policy of product development and although the Company reserves the right to change specifications, it attempts to keep customers informed of any alterations. This publication is for general information only and customers are requested to contact our Process Filtration Sales Department for detailed information and advice on a products suitability for specific applications. All products are sold subject to the company's Standard conditions of sale.

Europe: +44 (0)191 4105121 dhprocess@parker.com - North America: +1 608 824 0500 dhpsales.na@parker.com www.parker.com/dhpharma

ENERGOEKONOM spol. s r.o., Wolkerova 433, CZ-250 82 Úvaly, Czech Republic, Tel.: +420 281 981 055, info@energoekonom.cz, www.energoekonom.cz

HSL Filter Housings

- sanitary liquid

- Single element sanitary liquid housing
- Designed specifically for the food & beverage and pharmaceutical industries
- Sanitary tri-clamp body closure as standard
- STANDARD product
  - Sanitary surface finish
  - Tri-clamp connections
- PLUS product
  - Available in 3 different vessel classes: Standard (CE), Atex and High Pressure
  - Sanitary or sanitary electropolished surface finish options
  - Wide range of vent and drain connections
  - Choice of gasket and seal materials

Specification

STANDARD Range
Materials of Construction

Housing:	316L Stainless Steel
Seals:	Silicone FDA
Clamps:	304 Stainless Steel

Surface Finish

Internal:	Polished 0.4 µm Ra (16 µIn Ra)
External:	Polished 0.25 µm Ra (10 µIn Ra)

All finishes pickled & passivated.

PLUS Range
Materials of Construction

Housing:	316L Stainless Steel
Seals:	EPDM FDA PTFE FDA Silicone FDA Viton FDA
Clamps:	304 Stainless Steel

Surface Finish

- Sanitary Finish

Internal:	Polished 0.4 µm Ra (16 µIn Ra)
External:	Polished 0.25 µm Ra (10 µIn Ra)

- Sanitary Electropolished Finish

Internal:	Polished 0.4 µm Ra (16 µIn Ra) and Electropolished
External:	Polished 0.25 µm Ra (10 µIn Ra)

Welding
All assembly welds are full penetration.
All welds are crevice and undercut free.
Weld finish & detail drawings available upon request.

Certification
Supplied as standard with vessel inspection certificate.

Material Test Certification
EN10204 3.1 supplied upon request.

Design Code
Housings designed in accordance with the European Council Pressure Equipment Directive (PED) 97/23/EC and the UK statutory Pressure Equipment Regulations (PER) 1999 N° 2001.

PED / PER conformity assessments based on Fluid Group 2 Gas (harmless) including steam. Only housings over PS.V 50 bar / litres bear the CE mark.

Design Basis
ASME VIII Division 1.

Standard Range

Working Condition PED 97/23/EC			Maximum Pressure				
Fluid Group	State	Temperature	01A	01B	011	012	013
Non Dangerous	Liquid / Gas	150 °C (302 °F)	10.00 barg (145.03 psig)	10.00 barg (145.03 psig)	10.00 barg (145.03 psig)	10.00 barg (145.03 psig)	10.00 barg (145.03 psig)
Dangerous	Liquid / Gas	150 °C (302 °F)	10.00 barg (145.03 psig)	10.00 barg (145.03 psig)	5.00 barg (72.51 psig)	5.00 barg (72.51 psig)	5.00 barg (72.51 psig)
PED Conformity Assessment Category			SEP	SEP	SEP	SEP	CAT I
Volume (litres)			0.75	0.5	2.9	4.8	6.7

Plus Range

CE	Working Condition PED 97/23/EC		Maximum Pressure						
Fluid Group	State	Temperature	01A	01B	01K	011	012	013	014
Non Dangerous	Gas / Vapour	150 °C (302 °F)	10.00 barg (145.03 psig)	10.00 barg (145.03 psig)	10.00 barg (145.03 psig)	10.00 barg (145.03 psig)	10.00 barg (145.03 psig)	10.00 barg (145.03 psig)	10.00 barg (145.03 psig)
Dangerous	Gas / Vapour	150 °C (302 °F)	10.00 barg (145.03 psig)	10.00 barg (145.03 psig)	5.00 barg (72.51 psig)	5.00 barg (72.51 psig)	5.00 barg (72.51 psig)	5.00 barg (72.51 psig)	5.00 barg (72.51 psig)
Non Dangerous	Liquid	150 °C (302 °F)	10.00 barg (145.03 psig)	10.00 barg (145.03 psig)	10.00 barg (145.03 psig)	10.00 barg (145.03 psig)	10.00 barg (145.03 psig)	10.00 barg (145.03 psig)	10.00 barg (145.03 psig)
Dangerous	Liquid	150 °C (302 °F)	10.00 barg (145.03 psig)	10.00 barg (145.03 psig)	5.00 barg (72.51 psig)	5.00 barg (72.51 psig)	5.00 barg (72.51 psig)	5.00 barg (72.51 psig)	5.00 barg (72.51 psig)
PED Conformity Assessment Category			SEP	SEP	SEP	SEP	SEP	CAT I	CAT I
Volume (litres)			0.75	0.5	1.7	2.9	4.8	6.7	8.6

ATEX	Working Condition PED 97/23/EC		Maximum Pressure						
Fluid Group	State	Temperature	01A	01B	01K	011	012	013	014
Non Dangerous	Gas / Vapour	135 °C (275 °F)	10.00 barg (145.03 psig)	10.00 barg (145.03 psig)	10.00 barg (145.03 psig)	10.00 barg (145.03 psig)	10.00 barg (145.03 psig)	10.00 barg (145.03 psig)	10.00 barg (145.03 psig)
Dangerous	Gas / Vapour	135 °C (275 °F)	10.00 barg (145.03 psig)	10.00 barg (145.03 psig)	5.00 barg (72.51 psig)	5.00 barg (72.51 psig)	5.00 barg (72.51 psig)	5.00 barg (72.51 psig)	5.00 barg (72.51 psig)
Non Dangerous	Liquid	135 °C (275 °F)	10.00 barg (145.03 psig)	10.00 barg (145.03 psig)	10.00 barg (145.03 psig)	10.00 barg (145.03 psig)	10.00 barg (145.03 psig)	10.00 barg (145.03 psig)	10.00 barg (145.03 psig)
Dangerous	Liquid	135 °C (275 °F)	10.00 barg (145.03 psig)	10.00 barg (145.03 psig)	5.00 barg (72.51 psig)	5.00 barg (72.51 psig)	5.00 barg (72.51 psig)	5.00 barg (72.51 psig)	5.00 barg (72.51 psig)
PED Conformity Assessment Category			SEP	SEP	SEP	SEP	SEP	CAT I	CAT I
Volume (litres)			0.75	0.5	1.7	2.9	4.8	6.7	8.6

High Pressure	Working Condition PED 97/23/EC		Maximum Pressure						
Fluid Group	State	Temperature	01A	01B	01K	011	012	013	014
Non Dangerous	Gas / Vapour / Liquid	205 °C (401 °F)	16.00 barg (232.06 psig)	16.00 barg (232.06 psig)	16.00 barg (232.06 psig)	16.00 barg (232.06 psig)	16.00 barg (232.06 psig)	16.00 barg (232.06 psig)	16.00 barg (232.06 psig)
PED Conformity Assessment Category			SEP	SEP	SEP	SEP	CAT I	CAT I	CAT I
Volume (litres)			0.75	0.5	1.7	2.9	4.8	6.7	8.6

Note: All housings are fully vacuum rated.

Physical Characteristics

Bowl Height	Dimensions (mm) 'A'	'B'	'C'	Typical Weight
A Size 125 mm (5¨)	117 mm (4.6¨)	191 mm (7.5¨)	130 mm (5.1¨)	2.0 Kg (4.4lbs)
B Size 65 mm (2 1/2¨)	117 mm (4.6¨)	136 mm (5.4¨)	70 mm (2.8¨)	1.8 Kg (3.9lbs)
250 mm (10¨)	156 mm (6.1¨)	417 mm (16.4¨)	313 mm (12.3¨)	3.8 Kg (8.3 lbs)
500 mm (20¨)	156 mm (6.1¨)	667 mm (26.3¨)	561 mm (22.1¨)	4.8 Kg (10.5 lbs)
750 mm (30¨)	156 mm (6.1¨)	912 mm (35.9¨)	809 mm (31.8¨)	5.7 Kg (12.5 lbs)
1000 mm (40¨)	156 mm (6.1¨)	1160 mm (45.7¨)	1057 mm (41.6¨)	6.7 Kg (14.7 lbs)

Dimensions shown are based on the STANDARD range. For accurate dimensions, please contact Parker domnick hunter.

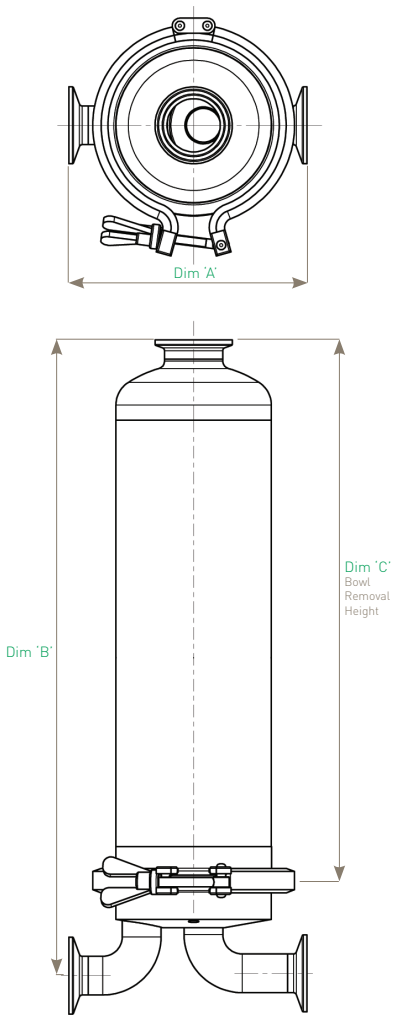

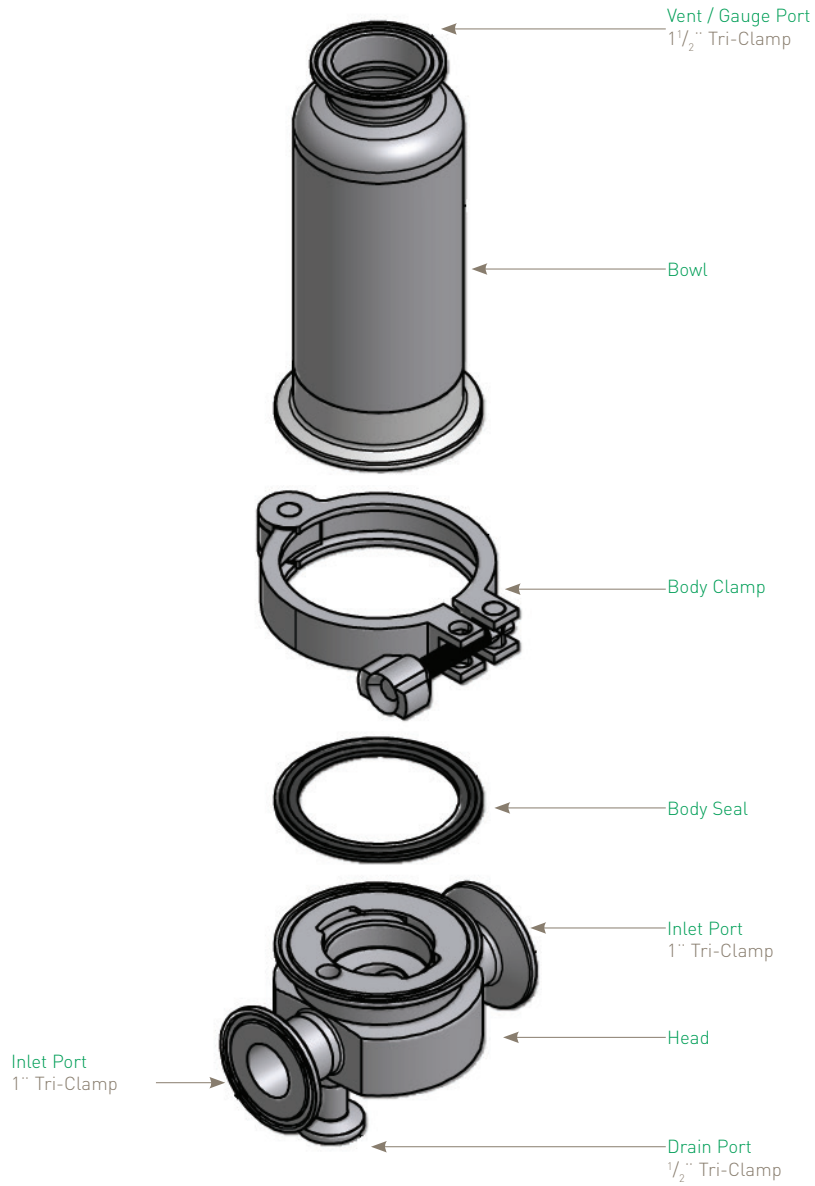

Example: Showing Demi A Size with 1¨ connections

Note: Demi vessels have 1/2¨ Tri-Clamp inlet drain as standard
K - 30¨ vessels have no drains as standard

The PLUS product range is available with many options of connections, vents, drains, surface finish, seals classification, etc. Please see product coding.

STANDARD Range - 10" to 30"

HSL [ ] 01 [ ] [ ] [ ] - [ ] - [ ]

Code	Vessel Class
CE	Standard

Code	Length (Nominal)
1	10" (250 mm)
2	20" (500 mm)
3	30" (750 mm)

Code	Connection Size
B	1" (25.4 mm)

Code	Standard
T	Tri-Clamp

Code	Cartridge
C	226

Code	Seal
S	Silicone

Note: No drain(s) as standard.

STANDARD Range - Demi A & B

HSL [ ] 01 [ ] [ ] [ ] - [ ] - [ ]

Code	Vessel Class
CE	Standard

Code	Length (Nominal)
A	5" (125 mm)
B	2½" (65 mm)

Code	Connection Size
B	1"

Code	Standard
T	Tri-Clamp

Code	Cartridge
T	216

Code	Seal
S	Silicone

Note: ½" Tri-Clamp inlet drain as standard.

PLUS Range - K to 40"

HSL [ ] 01 [ ] [ ] [ ] [ ] [ ] - [ ] [ ] - [ ] - [ ]

Code	Vessel Class
CE	Standard
AT	ATEX
HP*	High Pressure

** Supplied complete with a double bolted clamp*

Code	Length (Nominal)
K	5" (125 mm)
1	10" (250 mm)
2	20" (500 mm)
3	30" (750 mm)
4	40" (1000 mm)

Code	Connection Size
B	1" (25.4 mm)

Code	Standard
D	DIN11851(M)
F [1] [2]	ANSI RF 150
H [2]	ANSI RF 300
L [2]	BS4504
	DIN2633
R	RJT(M)
S	SMS Union (M)
T	Tri-Clamp
W	ISO / BS Pipe

[1] Not suited for High Pressure Vessels. HP Vessels to use ANSI RF 300.
[2] Flanged vessels based on 1" O.D. pipe but use ¾" or NW20 flanges.

Code	Cartridge
C	226

Code	Seal
E	EPDM
P*	PTFE
S	Silicone
V	Viton

** Double bolted clamp required*

Code	Vent
A	1½" TCF & 2 x Rectus 21
E	1½" TCF & 2 x Staubli RBE03
H	1½" TCF & Hosebarb
I	1½" TCF & Staubli RBE03
M	1½" TCF & ½" TCF
R	1½" TCF & Rectus 21
S	Staubli RBE03 Vertical
T	1½" TCF Only

Code	Drain
H	Hosebarb Inlet Only
R	Rectus 21 Inlet Only
S	Staubli RBE03 Inlet Only
X	No Drain
Y	1" TCF Inlet Only
Z	1" TCF Inlet & Outlet

Code	Surface Finish	Internal	External
B	Sanitary	0.4 µm	0.25 µm
P	Sanitary Electropolished	0.4 µm EP	0.25 µm

For Tagged Options customer identification numbers required at time of ordering

Code	Tagged
T	Yes
X	No

PLUS Range - Demi A & B

HSL [ ] 01 [ ] [ ] [ ] [ ] [ ] - [ ] [ ] - [ ] - [ ]

Code	Vessel Class
CE	Standard
AT	ATEX
HP	High Pressure

Code	Length (Nominal)
A	5" (125 mm)
B	2½" (65 mm)

Code	Connection Size
B	1"

Code	Standard
D	DIN11851
F [1] [2]	ANSI RF 150
H [2]	ANSI RF 300
L	BS4504
	DIN2633
R	RJT
S	SMS Union (M)
T	Tri-Clamp
W	ISO / BS Pipe

[1] Not suited for High Pressure Vessels. HP Vessels to use ANSI RF 300.
[2] Only available in ¾".

Code	Cartridge
T	126

Code	Seal
E	EPDM
P*	PTFE
S	Silicone
V	Viton

** Double bolted clamp required*

Code	Vent
A	1½" TCF & 2 x Rectus 21
B	1½" TCF & 2 x Staubli RBE03
H	1½" TCF & Hosebarb
I	1½" TCF & Staubli RBE03
M	1½" TCF & ½" TCF
R	1½" TCF & Rectus 21
S	Staubli RBE03
T	1½" TCF Only

Code	Drain
H	Hosebarb Inlet Only
R	Rectus 21 Inlet Only
S	Staubli RBE03 Inlet Only
T	½" TCF Inlet Only
X	No Drain

Code	Surface Finish	Internal	External
B	Sanitary	0.4 µm	0.25 µm
P	Sanitary Electropolished	0.4 µm EP	0.25 µm

For Tagged Options customer identification numbers required at time of ordering

Code	Tagged
T	Yes
X	No

Europe: +44 (0)191 4105121 dhprocess@parker.com - North America: +1 608 824 0500 dhpsales.na@parker.com www.parker.com/dhpharma

Parker domnick hunter has a continuous policy of product development and although the Company reserves the right to change specifications, it attempts to keep customers informed of any alterations. This publication is for general information only and customers are requested to contact our Process Filtration Sales Department for detailed information and advice on a products suitability for specific applications. All products are sold subject to the company's Standard conditions of sale.

ENERGOEKONOM spol. s r.o., Wolkerova 433, CZ-250 82 Úvaly, Czech Republic, Tel.: +420 281 981 055, info@energoekonom.cz, www.energoekonom.cz

HSI Filter Housings

- in-line sanitary liquid & gas

- In-line sanitary liquid & gas housing
- Designed specifically for the food and beverage and pharmaceutical industry
- Sanitary tri-clamp body closure as standard
- STANDARD product
  - Sanitary surface finish
  - Tri-clamp connections
- PLUS product
  - Available in 3 different vessel classes: Standard (CE), Atex & High Pressure
  - Sanitary or sanitary electropolished surface finish options
  - Wide range of vent and drain connections
  - Choice of gasket and seal materials

Specification

Materials of Construction

Housing:	316L Stainless Steel
Seals:	Silicone FDA
Clamps:	304 Stainless Steel

STANDARD Range Surface Finish

Internal:	Polished 0.4 µm Ra (16 µIn Ra)
External:	Polished 0.25 µm Ra (10 µIn Ra)

All finishes pickled & passivated.

Materials of Construction

Housing:	316L Stainless Steel
Seals:	EPDM FDA PTFE FDA Silicone FDA Viton FDA
Clamps:	304 Stainless Steel

PLUS Range Surface Finish

- Sanitary Finish

Internal:	Polished 0.4 µm Ra (16 µIn Ra)
External:	Polished 0.25 µm Ra (10 µIn Ra)

- Sanitary Electropolished Finish

Internal:	Polished 0.4 µm Ra (16 µIn Ra) and Electropolished
External:	Polished 0.25 µm Ra (10 µIn Ra)

Welding

All assembly welds are full penetration. All welds are crevice and undercut free.

Weld finish & detail drawings available upon request.

Certification

Supplied as standard with vessel inspection certificate.

Material Test Certification

EN10204 3.1 supplied upon request.

Design Code

Housings designed in accordance with the European Council Pressure Equipment Directive (PED) 97/23/EC and the UK statutory Pressure Equipment Regulations (PER) 1999 N° 2001.

PED / PER conformity assessments based on Fluid Group 2 Gas (harmless) including steam. Only housings over PS.V 50 bar / litres bear the CE mark.

Design Basis

ASME VIII Division 1.

Standard Range

Working Condition PED 97/23/EC			Maximum Pressure				
Fluid Group	State	Temperature	01A	01B	011	012	013
Non Dangerous	Liquid / Gas	150 °C (302 °F)	10.00 barg (145.03 psig)	10.00 barg (145.03 psig)	10.00 barg (145.03 psig)	10.00 barg (145.03 psig)	10.00 barg (145.03 psig)
Dangerous	Liquid / Gas	150 °C (302 °F)	10.00 barg (145.03 psig)	10.00 barg (145.03 psig)	5.00 barg (72.51 psig)	5.00 barg (72.51 psig)	5.00 barg (72.51 psig)
PED Conformity Assessment Category			SEP	SEP	SEP	SEP	CAT I
Volume (litres)			0.75	0.5	2.9	4.8	6.7

Plus Range

CE	Working Condition PED 97/23/EC		Maximum Pressure						
Fluid Group	State	Temperature	01A	01B	01K	011	012	013	014
Non Dangerous	Gas / Vapour	150 °C (302 °F)	10.00 barg (145.03 psig)	10.00 barg (145.03 psig)	10.00 barg (145.03 psig)	10.00 barg (145.03 psig)	10.00 barg (145.03 psig)	10.00 barg (145.03 psig)	10.00 barg (145.03 psig)
Dangerous	Gas / Vapour	150 °C (302 °F)	10.00 barg (145.03 psig)	10.00 barg (145.03 psig)	5.00 barg (72.51 psig)	5.00 barg (72.51 psig)	5.00 barg (72.51 psig)	5.00 barg (72.51 psig)	5.00 barg (72.51 psig)
Non Dangerous	Liquid	150 °C (302 °F)	10.00 barg (145.03 psig)	10.00 barg (145.03 psig)	10.00 barg (145.03 psig)	10.00 barg (145.03 psig)	10.00 barg (145.03 psig)	10.00 barg (145.03 psig)	10.00 barg (145.03 psig)
Dangerous	Liquid	150 °C (302 °F)	10.00 barg (145.03 psig)	10.00 barg (145.03 psig)	5.00 barg (72.51 psig)	5.00 barg (72.51 psig)	5.00 barg (72.51 psig)	5.00 barg (72.51 psig)	5.00 barg (72.51 psig)
PED Conformity Assessment Category			SEP	SEP	SEP	SEP	SEP	CAT I	CAT I
Volume (litres)			0.75	0.5	1.7	2.9	4.8	6.7	8.6

ATEX	Working Condition PED 97/23/EC		Maximum Pressure						
Fluid Group	State	Temperature	01A	01B	01K	011	012	013	014
Non Dangerous	Gas / Vapour	135 °C (275 °F)	10.00 barg (145.03 psig)	10.00 barg (145.03 psig)	10.00 barg (145.03 psig)	10.00 barg (145.03 psig)	10.00 barg (145.03 psig)	10.00 barg (145.03 psig)	10.00 barg (145.03 psig)
Dangerous	Gas / Vapour	135 °C (275 °F)	10.00 barg (145.03 psig)	10.00 barg (145.03 psig)	5.00 barg (72.51 psig)	5.00 barg (72.51 psig)	5.00 barg (72.51 psig)	5.00 barg (72.51 psig)	5.00 barg (72.51 psig)
Non Dangerous	Liquid	135 °C (275 °F)	10.00 barg (145.03 psig)	10.00 barg (145.03 psig)	10.00 barg (145.03 psig)	10.00 barg (145.03 psig)	10.00 barg (145.03 psig)	10.00 barg (145.03 psig)	10.00 barg (145.03 psig)
Dangerous	Liquid	135 °C (275 °F)	10.00 barg (145.03 psig)	10.00 barg (145.03 psig)	5.00 barg (72.51 psig)	5.00 barg (72.51 psig)	5.00 barg (72.51 psig)	5.00 barg (72.51 psig)	5.00 barg (72.51 psig)
PED Conformity Assessment Category			SEP	SEP	SEP	SEP	SEP	CAT I	CAT I
Volume (litres)			0.75	0.5	1.7	2.9	4.8	6.7	8.6

High Pressure	Working Condition PED 97/23/EC		Maximum Pressure						
Fluid Group	State	Temperature	01A	01B	01K	011	012	013	014
Non Dangerous	Gas / Vapour / Liquid	205 °C (401 °F)	16.00 barg (232.06 psig)	16.00 barg (232.06 psig)	16.00 barg (232.06 psig)	16.00 barg (232.06 psig)	16.00 barg (232.06 psig)	16.00 barg (232.06 psig)	16.00 barg (232.06 psig)
PED Conformity Assessment Category			SEP	SEP	SEP	SEP	CAT I	CAT I	CAT I
Volume (litres)			0.75	0.5	1.7	2.9	4.8	6.7	8.6

Note: All housings are fully vacuum rated.

Physical Characteristics

Bowl Height	Dimensions (mm) 'A'	'B'	'C'	Typical Weight
A Size 125 mm (5¨)	63.5 mm (2.5¨)	207 mm (8.1¨)	130 mm (5.1¨)	1.0 Kg (2.2lbs)
B Size 65 mm (2 1/2¨)	63.5 mm (2.5¨)	152 mm (6.0¨)	70 mm (2.8¨)	0.8 Kg (0.03lbs)
250 mm (10¨)	101.6 mm (4¨)	449 mm (17.7¨)	313 mm (12.3¨)	3.6 Kg (7.9 lbs)
500 mm (20¨)	101.6 mm (4¨)	699 mm (27.5¨)	561 mm (22.1¨)	4.6 Kg(10.1 lbs)
750 mm (30¨)	101.6 mm (4¨)	944 mm (37.2¨)	809 mm (31.9¨)	5.6 Kg(12.3 lbs)

Dimensions shown are based on the STANDARD range. For accurate dimensions, please contact Parker domnick hunter.

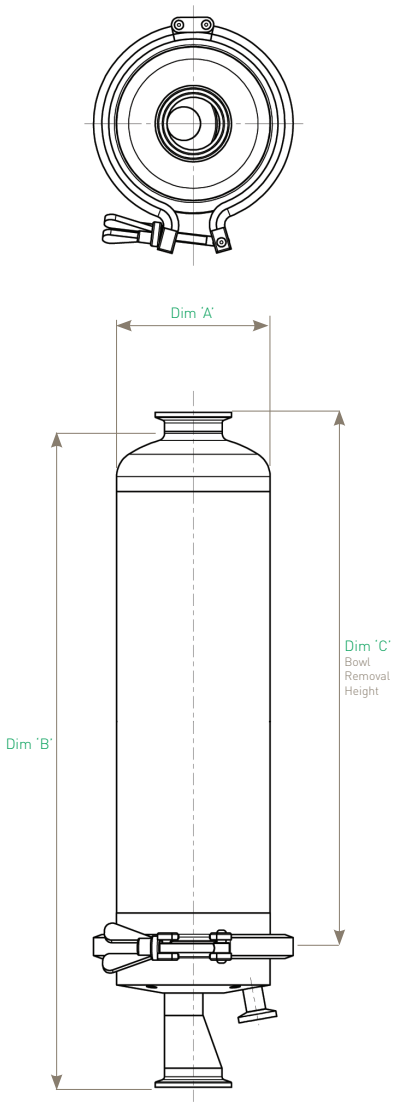

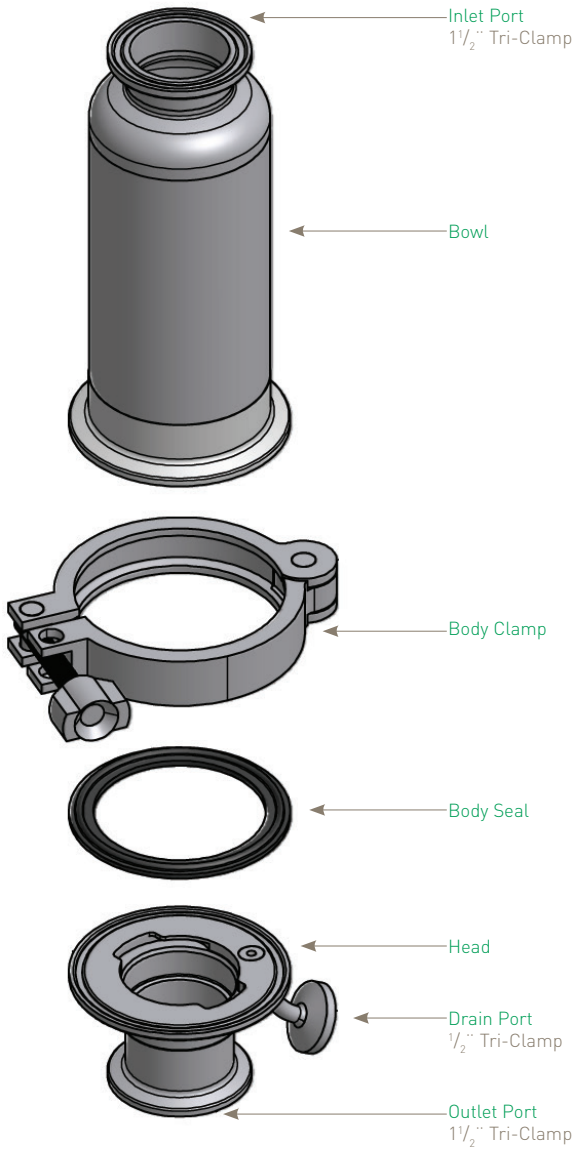

Example: Showing Demi A Size with 1¨ connections

The PLUS product range is available with many options of connections, vents, drains, surface finish, seals classification, etc. Please see product coding.

STANDARD Range - 10" to 30"

HSI [ ] 01 [ ] [ ] [ ] - [ ] - [ ]

Code	Vessel Class
CE	Standard

Code	Length (Nominal)
1	10" (250 mm)
2	20" (500 mm)
3	30" (750 mm)

Code	Connection Size
Y	1 1/2" (38.1 mm)

Code	Standard
T	Tri-Clamp

Code	Cartridge
C	226

Code	Seal
S	Silicone

STANDARD Range - Demi A & B

HSI [ ] 01 [ ] [ ] [ ] - [ ] - [ ]

Code	Vessel Class
CE	Standard

Code	Length (Nominal)
A	5" (125 mm)
B	2 1/2" (65 mm)

Code	Connection Size
Y	1 1/2"

Code	Standard
T	Tri-Clamp

Code	Cartridge
T	216

Code	Seal
S	Silicone

PLUS Range - K to 40"

HSI [ ] 01 [ ] [ ] [ ] [ ] [ ] - [ ] [ ] - [ ] - [ ]

Code	Vessel Class
CE	Standard
AT	ATEX
HP*	High Pressure

* Supplied complete with a double bolted clamp

Code	Length (Nominal)
K	5" (125 mm)
1	10" (250 mm)
2	20" (500 mm)
3	30" (750 mm)
4	40" (1000 mm)

Code	Connection Size
Y	1 1/2" (38.1 mm)

Code	Standard
T	Tri-Clamp

Code	Cartridge
C	226

Code	Seal
E	EPDM
P*	PTFE
S	Silicone
V	Viton

* Double bolted clamp required

Code	Vent
H	1 1/2" TCF & Hosebarb
I	1 1/2" TCF & Staubli RBE03
M	1 1/2" TCF & 1/2" TCF
R	1 1/2" TCF & Rectus 21
X	No Vent

Code	Drain
H	Hosebarb
R	Rectus 21
S	Staubli RBE03
T	1/2" TCF
X	No Drain

Code	Surface Finish	Internal	External
B	Sanitary	0.4 µm	0.25 µm
P	Sanitary Electropolished	0.4 µm EP	0.25 µm

Code	Tagged
T	Yes
X	No

For Tagged Options customer identification numbers required at time of ordering

PLUS Range - Demi A & B

HSI [ ] 01 [ ] [ ] [ ] [ ] [ ] - [ ] [ ] - [ ] - [ ]

Code	Vessel Class
CE	Standard
AT	ATEX
HP*	High Pressure

* Supplied complete with a double bolted clamp

Code	Length (Nominal)
A	5" (125 mm)
B	2 1/2" (65 mm)

Code	Connection Size
Y	1 1/2"

Code	Standard
T	Tri-Clamp

Code	Cartridge
T	126

Code	Seal
E	EPDM
P*	PTFE
S	Silicone
V	Viton

* Double bolted clamp required

Code	Vent
H (1)	1 1/2" TCF & Hosebarb
I (1)	1 1/2" TCF & Staubli RBE03
M (1)	1 1/2" TCF & 1/2" TCF
R (1)	1 1/2" TCF & Rectus 21
X	No Vent

(1) Vent is part of inlet connection

Code	Drain
H	Hosebarb
R	Rectus 21
S	Staubli RBE03
T	1/2" TCF
X	No Drain

Code	Surface Finish	Internal	External
B	Sanitary	0.4 µm	0.25 µm
P	Sanitary Electropolished	0.4 µm EP	0.25 µm

Code	Tagged
T	Yes
X	No

For Tagged Options customer identification numbers required at time of ordering

Parker domnick hunter has a continuous policy of product development and although the Company reserves the right to change specifications, it attempts to keep customers informed of any alterations. This publication is for general information only and customers are requested to contact our Process Filtration Sales Department for detailed information and advice on a products suitability for specific applications. All products are sold subject to the company's Standard conditions of sale.

Europe: +44 (0)191 4105121 dhprocess@parker.com - North America: +1 608 824 0500 dhpsales.na@parker.com www.parker.com/dhpharma

ENERGOEKONOM spol. s r.o., Wolkerova 433, CZ-250 82 Úvaly, Czech Republic, Tel.: +420 281 981 055, info@energoekonom.cz, www.energoekonom.cz

HIL Filter Housings

- industrial liquid

- Industrial liquid housing for prefiltration and clarification duties
- STANDARD product
  - BSP (G) or NPT connections and standard finish
- PLUS product
  - Available in 3 different vessel classes: Standard (CE), Atex & High Pressure
  - Standard and electropolished surface finishes available
  - A number of inlet / outlet port connections
  - Choice of BSP, NPT or no vent
  - Choice of BSP or NPT drain
  - Option of C (226) location and fabricated (not cast) head

Specification

STANDARD Range
Materials of Construction

- Housing: Cast Head - Stainless Steel
  Bowl - 316L Stainless Steel
- Seals: EPDM FDA
- Clamps: 304 Stainless Steel

Surface Finish

- Internal: As Welded
- External: Polished 0.8 µm Ra (32 µIn Ra)

All finishes pickled & passivated.

PLUS Range
Materials of Construction

- Housing: Cast Head - Stainless Steel
  Bowl - 316L Stainless Steel
- Seals: EPDM FDA
  PTFE FDA
  Silicone FDA
  Viton FDA
- Clamps: 304 Stainless Steel

Surface Finish
Two Finished Available:

- Standard Finish
  Head-Cast, Pickled & Passivated
  Bowl Internal: As Welded
  Pickled & Passivated
  Bowl External: Polished 0.8 µm Ra (32 µIn Ra)
- Standard Electropolished Finish
  Head-Cast, Pickled & Passivated
  Bowl Internal: Electropolished
  Bowl External: Polished 0.8 µm Ra (32 µIn Ra)

Welding

All assembly welds are full penetration.
All welds are crevice and undercut free.

Weld finish & detail drawings available upon request.

Certification

Supplied as standard with vessel inspection certificate.

Material Test Certification

EN10204 3.1 supplied upon request.

Design Code

Housings designed in accordance with the European Council Pressure Equipment Directive (PED) 97/23/EC and the UK statutory Pressure Equipment Regulations (PER) 1999 N° 2001.

PED / PER conformity assessments based on Fluid Group 2 Gas (harmless) including steam. Only housings over PS.V 50 bar / litres bear the CE mark.

Design Basis

ASME VIII Division 1.

STANDARD Range

Working Condition PED 97/23/EC			Maximum Pressure		
Fluid Group	State	Temperature	011	012	013
Non Dangerous	Liquid / Gas	150 °C (302 °F)	10.00 barg (145.03 psig)	10.00 barg (145.03 psig)	10.00 barg (145.03 psig)
Dangerous	Liquid / Gas	150 °C (302 °F)	5.00 barg (72.51 psig)	5.00 barg (72.51 psig)	5.00 barg (72.51 psig)
PED Conformity Assessment Category			SEP	CAT I	CAT I
Volume (litres)			3.2	5.1	7.0

PLUS Range

CE	Working Condition PED 97/23/EC		Maximum Pressure			
Fluid Group	State	Temperature	011	012	013	014
Non Dangerous	Gas / Vapour	150 °C (302 °F)	10.00 barg (145.03 psig)	10.00 barg (145.03 psig)	10.00 barg (145.03 psig)	10.00 barg (145.03 psig)
Dangerous	Gas / Vapour	150 °C (302 °F)	5.00 barg (72.51 psig)	5.00 barg (72.51 psig)	5.00 barg (72.51 psig)	5.00 barg (72.51 psig)
Non Dangerous	Liquid	150 °C (302 °F)	10.00 barg (145.03 psig)	10.00 barg (145.03 psig)	10.00 barg (145.03 psig)	10.00 barg (145.03 psig)
Dangerous	Liquid	150 °C (302 °F)	5.00 barg (72.51 psig)	5.00 barg (72.51 psig)	5.00 barg (72.51 psig)	5.00 barg (72.51 psig)
PED Conformity Assessment Category			SEP	CAT I	CAT I	CAT I
Volume (litres)			3.2	5.1	7.0	8.9

ATEX	Working Condition PED 97/23/EC		Maximum Pressure			
Fluid Group	State	Temperature	011	012	013	014
Non Dangerous	Gas / Vapour	135 °C (275 °F)	10.00 barg (145.03 psig)	10.00 barg (145.03 psig)	10.00 barg (145.03 psig)	10.00 barg (145.03 psig)
Dangerous	Gas / Vapour	135 °C (275 °F)	5.00 barg (72.51 psig)	5.00 barg (72.51 psig)	5.00 barg (72.51 psig)	5.00 barg (72.51 psig)
Non Dangerous	Liquid	135 °C (275 °F)	10.00 barg (145.03 psig)	10.00 barg (145.03 psig)	10.00 barg (145.03 psig)	10.00 barg (145.03 psig)
Dangerous	Liquid	135 °C (275 °F)	5.00 barg (72.51 psig)	5.00 barg (72.51 psig)	5.00 barg (72.51 psig)	5.00 barg (72.51 psig)
PED Conformity Assessment Category			SEP	CAT I	CAT I	CAT I
Volume (litres)			3.2	5.1	7.0	8.9

High Pressure	Working Condition PED 97/23/EC		Maximum Pressure			
Fluid Group	State	Temperature	011	012	013	014
Non Dangerous	Gas / Vapour / Liquid	205 °C (401 °F)	16.00 barg (232.06 psig)	16.00 barg (232.06 psig)	16.00 barg (232.06 psig)	16.00 barg (232.06 psig)
PED Conformity Assessment Category			CAT I	CAT I	CAT I	CAT I
Volume (litres)			3.2	5.1	7.0	8.9

Note: All housings are fully vacuum rated.

Physical Characteristics

Bowl Height	Dimensions (mm) 'A'	'B'	'C'	Typical Weight Bowl	Head	Total
250 mm (10¨)	150 mm (5.9¨)	441 mm (17.4¨)	297 mm (11.7¨)	1.5 Kg (3.3 lbs)	1.2 Kg (2.6 lbs)	3.8 Kg (8.4 lbs)
500 mm (20¨)	150 mm (5.9¨)	691 mm (27.2¨)	550 mm (21.7¨)	2.5 Kg (5.5 lbs)	1.2 Kg (2.6 lbs)	4.9 Kg (10.8 lbs)
750 mm (30¨)	150 mm (5.9¨)	936 mm (26.9¨)	814 mm (32.0¨)	3.5 Kg (7.7 lbs)	1.2 Kg (2.6 lbs)	6.0 Kg (13.2 lbs)

Dimensions shown are based on the STANDARD range. For accurate dimensions, please contact Parker domnick hunter.

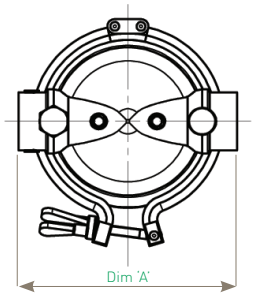

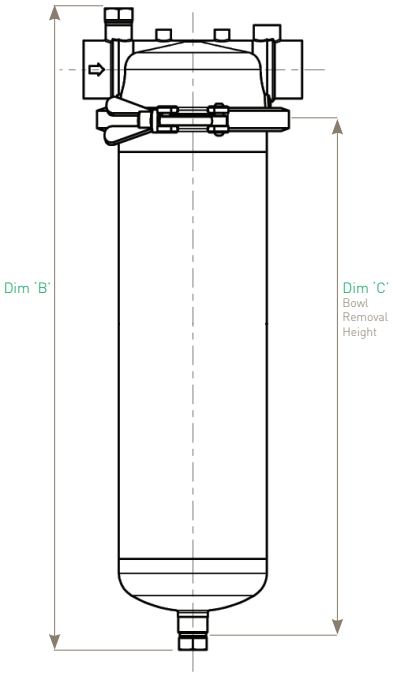

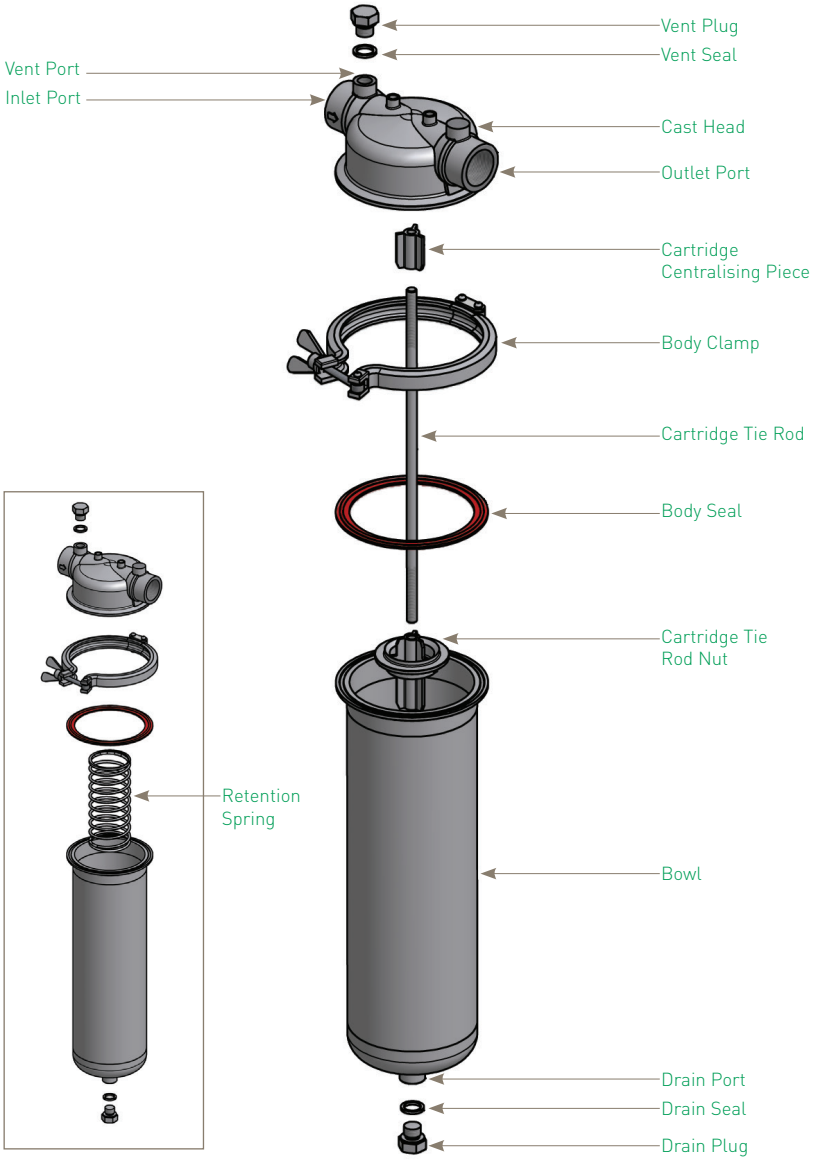

Example: Showing 10¨ Size with 1¨ connections

The PLUS product range is available with many options of connections, vents, drains, surface finish, seals classification, etc. Please see product coding.

STANDARD Range - 10" to 30"

HIL [ ] 01 [ ] [ ] [ ] - [ ] - [ ]

Code	Vessel Class
CE	Standard

Code	Length (Nominal)
1	10" (250 mm)
2	20" (500 mm)
3	30" (750 mm)

Code	Connection Size
B	1" (25.4 mm)

Code	Standard
B	BSPP
N	NPT

Code	Cartridge
B	DOE
D	222

Code	Seal
E	EPDM

PLUS Range - 10" to 40"

HIL [ ] 01 [ ] [ ] [ ] [ ] [ ] - [ ] [ ] - [ ] - [ ]

Code	Vessel Class
CE	Standard
AT	ATEX
HP*	High Pressure

** Supplied complete with a double bolted clamp*

Code	Length (Nominal)
1	10" (250 mm)
2	20" (500 mm)
3	30" (750 mm)
4	40" (1000 mm)

Code	Connection Size
B	1" (25.4 mm)
Y	1 1/2" (38.1 mm)

Code	Standard
B*	BSPP (F)
F	ANSI RF150[1]
H	ANSI RF 300
L	BS4504 DIN2633
N*	NPT (F)
T*°	Tri-clamp

** Only available in 1" connection*
[1] Not suited for High Pressure Vessels. HP Vessels to use ANSI RF 300.
° Only available with 'C' Style cartridge configuration

Code	Cartridge
B	DOE
C	226 (Fabricated Head)
D	222

Code	Seal
E	EPDM
P*	PTFE
S	Silicone
V	Viton

** Double bolted clamp required*

Code	Vent
B	1/4" BSPP
N	1/4" NPT
X°	No Vent

°Only available with 'C' Style cartridge configuration

Code	Drain
B	1/4" BSPP (G1/4")
N	1/4" NPT

Code	Surface Finish	Internal	External
E	Standard Electropolished	Electropolished	0.8 µm
I	Standard	As Welded	0.8 µm

Code	Tagged
T	Yes
X	No

For Tagged Options customer identification numbers required at time of ordering

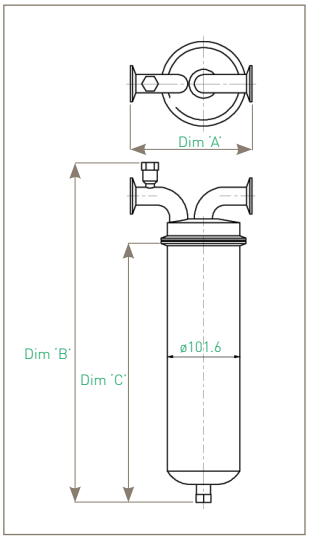

Important Note:
As shown on the coding chart above, the HIL is also available with an option 'C' (226) location. This design incorporates a machined, not cast, head and swept bend connections, as show in the diagram.

Bowl Height	Dimensions (mm) 'A'*	'B'	'C'
250 mm (10")	176 mm (6.9")	472 mm (18.6")	297 mm (11.7")
500 mm (20")	176 mm (6.9")	722 mm (28.4")	550 mm (25.4")
750 mm (30")	176 mm (6.9")	967 mm (38.1")	814 mm (32.0")
1000 mm (40")	176 mm (6.9")	1217 mm (47.9")	1058 mm (41.7")

**156 mm without vent*

Parker domnick hunter has a continuous policy of product development and although the Company reserves the right to change specifications, it attempts to keep customers informed of any alterations. This publication is for general information only and customers are requested to contact our Process Filtration Sales Department for detailed information and advice on a products suitability for specific applications. All products are sold subject to the company's Standard conditions of sale.

Europe: +44 (0)191 4105121 dhprocess@parker.com - North America: +1 608 824 0500 dhpsales.na@parker.com www.parker.com/dhpharma

ENERGOEKONOM spol. s r.o., Wolkerova 433, CZ-250 82 Úvaly, Czech Republic, Tel.: +420 281 981 055, info@energoekonom.cz, www.energoekonom.cz

HCA Enhanced Plus Filter Housing

- Alloy 22 gas housings

- Flow efficient range of gas housings
- Single element housing
- Designed to maximize flow and minimize pressure drop
- Designed specifically for aggressive gases and solvents
- Suitable for cartridge type 226, K to 30¨
- Wetted parts Alloy 22
  - Non wetted parts 304 and 316 stainless steel

Specification

Materials of Construction

- Housing: Alloy 22 *(Stainless Steel non-wetted parts)*
- Seals: PTFE, EPDM, Silicone or Viton *(All FDA)*
- Vent / Drain Seals: PTFE *(BSP Only)*

Surface Finish

- Internal: Polished 0.8 µm Ra
- External: Polished 0.8 µm Ra

All finishes pickled & passivated.

Welding

All assembly welds are full penetration.
All welds are crevice and undercut free.
Weld finish & detail drawings available upon request.

Certification

Supplied as standard with vessel inspection certificate.

Material Test Certification

EN10204 3.1 supplied upon request.

Design Code

Housings designed in accordance with the European Council Pressure Equipment Directive (PED) 97/23/EC and the UK statutory Pressure Equipment Regulations (PER) 1999 N° 2001.

PED / PER conformity assessments based on Fluid Group 1 Gas (dangerous) liquid and gases. Only housings over PS.V 25 bar / litres bear the CE mark.

Design Basis

ASME VIII Division 1.
ATEX 94/9/EC (where applicable).

C22 Working Condition PED 97/23/EC			Maximum Pressure			
Fluid Group	State	Temperature	01K	011	012	013
Non Dangerous Dangerous	Liquid / Gas	150 °C (302 °F)	10.00 barg (145.03 psig)	10.00 barg (145.03 psig)	10.00 barg (145.03 psig)	10.00 barg (145.03 psig)
PED Conformity Assessment Category			SEP	SEP	CAT I	CAT 1
Volume (litres)			1.3	2.2	3.5	4.8

ATEX Working Condition PED 97/23/EC			Maximum Pressure			
Fluid Group	State	Temperature	01K	011	012	013
Non Dangerous Dangerous	Liquid / Gas	135 °C (275 °F)	10.00 barg (145.03 psig)	10.00 barg (145.03 psig)	10.00 barg (145.03 psig)	10.00 barg (145.03 psig)
PED Conformity Assessment Category			SEP	SEP	CAT I	CAT 1
Volume (litres)			1.3	2.2	3.5	4.8

Note: All housings are fully vacuum rated.

Important Note

(Export restrictions may apply)
In response to International Law, Parker Hannifin require that any orders for Alloy 22 products are accompanied by written notification from the end user stating their company name, address and product application.

Physical Characteristics

Bowl Height	Dimensions (mm) 'A'	Weight (Kg) Bowl	Head	Total
5" (125 mm)	250	2.0	3.0	5.0
10" (250 mm)	370	3.0	3.0	6.0
20" (500 mm)	615	5.0	3.0	8.0
30" (750 mm)	865	7.0	3.0	10.0

Dimensions are based on illustration shown.
For accurate dimensions, please contact Parker domnick hunter.

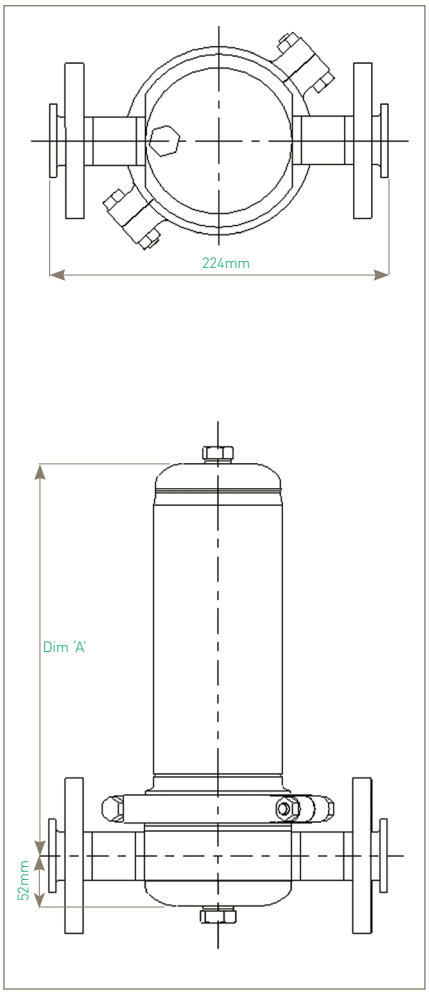

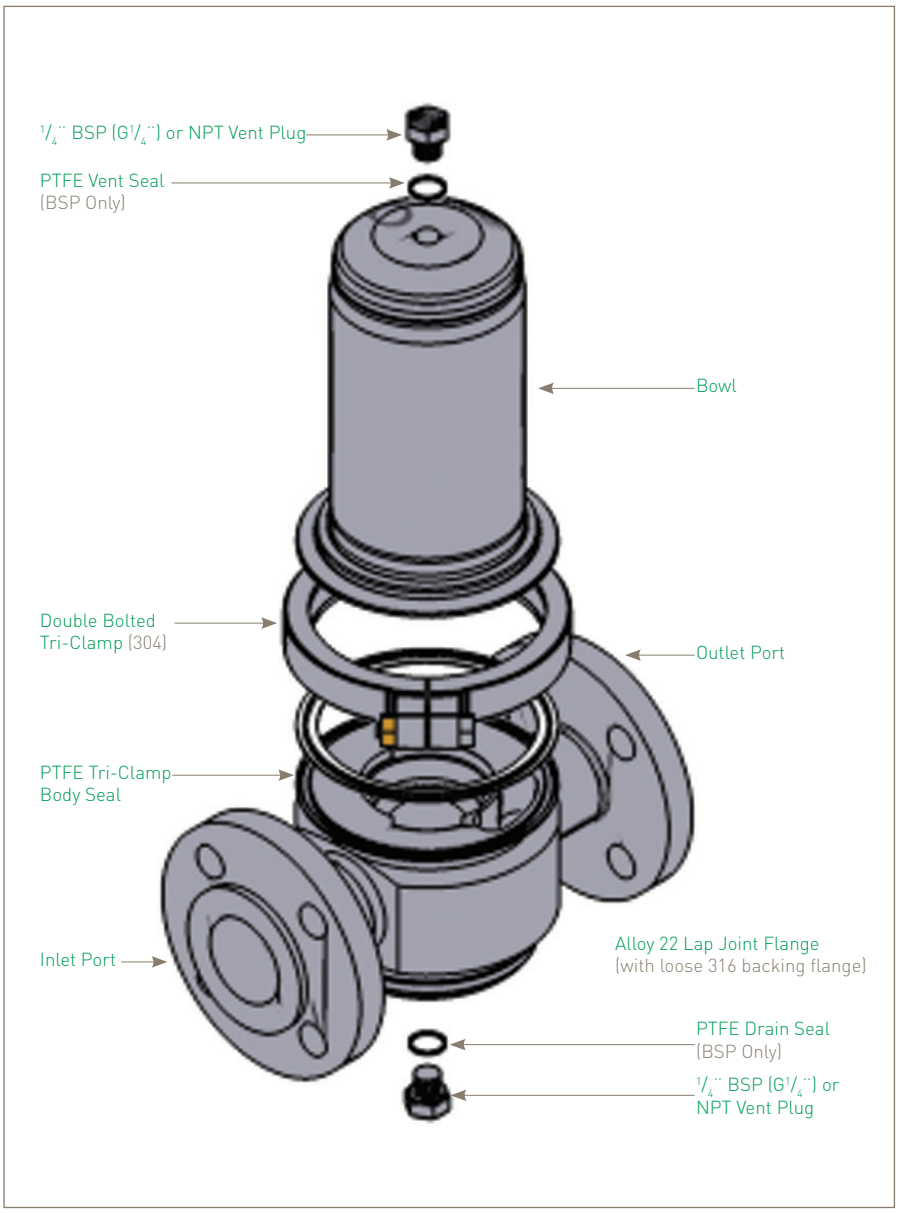

Ordering Information

HCA [ ] 01 [ ] [ ] [ ] [ ] [ ] - [ ] [ ] - [ ] - [ ]

Code	Material
22	Alloy 22
AT	ATEX

Code	Length (Nominal)
K	5" (125 mm)
1	10" (250 mm)
2	20" (500 mm)
3	30" (750 mm)

Code	Connection Size
C+	2" (50.80 mm)
Y*	1 1/2" (48.26 mm)

+ Tri-Clamp only
** Nominal Bore*

Code	Standard
B	BSPP (F)
F [1]	ANSI RF 150
H [1]	ANSI RF 300
L [1]	BS4504 DIN2633
N	NPT (F)
T	2" Tri-Clamp

[1] Loose stainless 316 lap joint flange

Code	Cartridge
C	226

Code	Seal
E	EPDM
P	PTFE
S	Silicone
V	Viton

Code	Vent
B	1/4" BSPP (F)
N	1/4" NPT (F)

Code	Drain
B	1/4" BSPP
N	1/4" NPT

Code	Surface Finish	Internal	External
E	Electropolished	Electropolished	0.8 µm
I	Standard	As Welded	0.8 µm

Code	Tagged
T	Yes
X	No

For Tagged Options customer identification numbers required at time of ordering

Parker domnick hunter has a continuous policy of product development and although the Company reserves the right to change specifications, it attempts to keep customers informed of any alterations. This publication is for general information only and customers are requested to contact our Process Filtration Sales Department for detailed information and advice on a products suitability for specific applications. All products are sold subject to the company's Standard conditions of sale.

Europe: +44 (0)191 4105121 dhprocess@parker.com - North America: +1 608 824 0500 dhpsales.na@parker.com www.parker.com/dhpharma

ENERGOEKONOM spol. s r.o., Wolkerova 433, CZ-250 82 Úvaly, Czech Republic, Tel.: +420 281 981 055, info@energoekonom.cz, www.energoekonom.cz

HCL Enhanced Plus Filter Housing

- Alloy 22 liquid housings

Parker domnick hunter

- Flow efficient range of liquid housings
- Range of inlet / outlet standard connections
- Designed specifically for aggressive liquids
- Suitable for cartridge types 226, K to 30¨
- Wetted parts Alloy 22
  - Non wetted parts 304 and 316 stainless steel

Specification

Materials of Construction

- Housing: Alloy 22 *(Stainless Steel non-wetted parts)*
- Seals: PTFE, EPDM, Silicone or Viton *(All FDA)*
- Vent / Drain Seals: PTFE *(BSP Only)*

Surface Finish

- Internal: Polished 0.8 µm Ra
- External: Polished 0.8 µm Ra

All finishes pickled & passivated.

Welding

All assembly welds are full penetration.
All welds are crevice and undercut free.
Weld finish & detail drawings available upon request.

Certification

Supplied as standard with vessel inspection certificate.

Material Test Certification

EN10204 3.1 supplied upon request.

Design Code

Housings designed in accordance with the European Council Pressure Equipment Directive (PED) 97/23/EC and the UK statutory Pressure Equipment Regulations (PER) 1999 N° 2001.

PED / PER conformity assessments based on Fluid Group 1 Gas (dangerous) liquid and gases. Only housings over PS.V 25 bar / litres bear the CE mark.

Design Basis

ASME VIII Division 1.
ATEX 94/9/EC (where applicable).

C22 Working Condition PED 97/23/EC			Maximum Pressure			
Fluid Group	State	Temperature	01K	011	012	013
Non Dangerous Dangerous	Liquid / Gas	150 °C (302 °F)	10.00 barg (145.03 psig)	10.00 barg (145.03 psig)	10.00 barg (145.03 psig)	10.00 barg (145.03 psig)
PED Conformity Assessment Category			SEP	SEP	CAT I	CAT 1
Volume (litres)			1.3	2.2	3.5	4.8

ATEX Working Condition PED 97/23/EC			Maximum Pressure			
Fluid Group	State	Temperature	01K	011	012	013
Non Dangerous Dangerous	Liquid / Gas	135 °C (275 °F)	10.00 barg (145.03 psig)	10.00 barg (145.03 psig)	10.00 barg (145.03 psig)	10.00 barg (145.03 psig)
PED Conformity Assessment Category			SEP	SEP	CAT I	CAT 1
Volume (litres)			1.3	2.2	3.5	4.8

Note: All housings are fully vacuum rated.

Important Note

(Export restrictions may apply)
In response to International Law, Parker Hannifin require that any orders for Alloy 22 products are accompanied by written notification from the end user stating their company name, address and product application.

Physical Characteristics

Bowl Height	Dimensions (mm) 'A'	Weight (Kg) Bowl	Head	Total
5" (125 mm)	240	2.0	3.0	5.0
10" (250 mm)	360	3.0	3.0	6.0
20" (500 mm)	607	5.0	3.0	8.0
30" (750 mm)	855	7.0	3.0	10.0

Dimensions are based on illustration shown.
For accurate dimensions, please contact Parker domnick hunter.

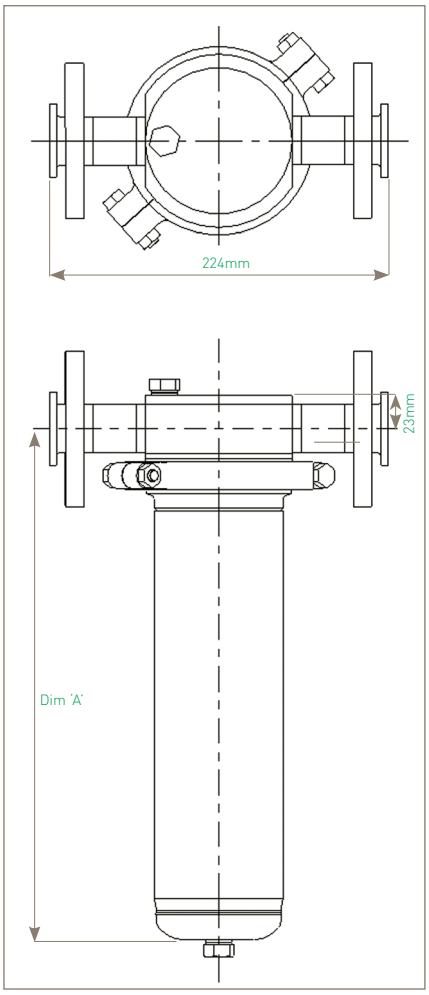

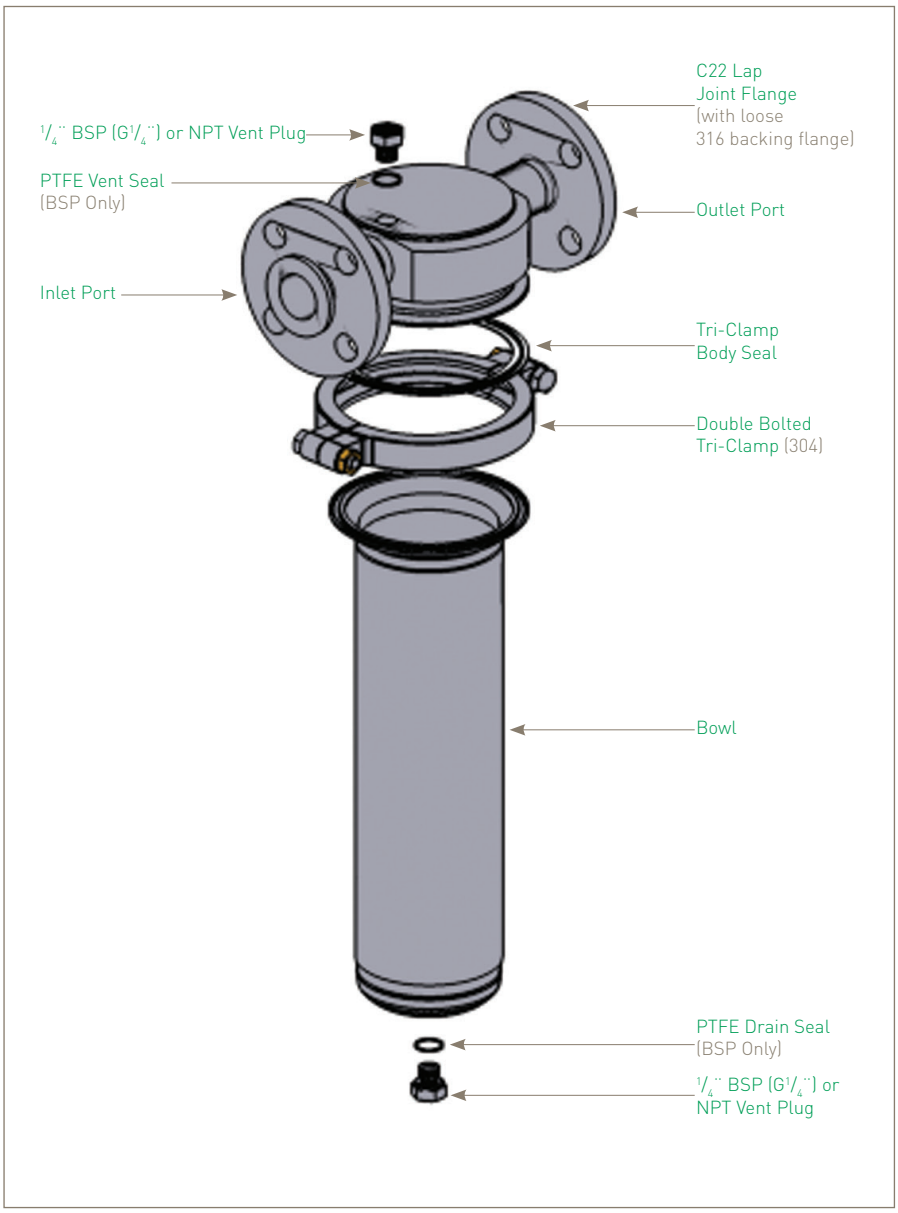

Ordering Information

HCL [ ] 01 [ ] [ ] [ ] [ ] [ ] [ ] - [ ] [ ] - [ ] - [ ]

Code	Material
22	Alloy 22
AT	ATEX

Code	Length (Nominal)
K	5" (125 mm)
1	10" (250 mm)
2	20" (500 mm)
3	30" (750 mm)

Code	Connection Size
B*	1" (33.4 mm)
Y+	1 1/2" (38.1 mm)

* Nominal Bore
\+ Tri-Clamp Only

Code	Standard
B	BSPP (F)
F [1]	ANSI RF150
H [1]	ANSI RF 300
L [1]	BS4504 DIN2633
N	NPT (F)
T	1 1/2" Tri-Clamp

[1] Loose stainless steel 316 Lab Joint Flange

Code	Cartridge
C	226 (Fabricated Head)

Code	Seal
E	EPDM
P	PTFE
S	Silicone
V	Viton

Code	Vent
B	1/4" BSPP
N	1/4" NPT

Code	Drain
B	1/4" BSPP
N	1/4" NPT

Code	Surface Finish	Internal	External
E	Electropolished	Electropolished	0.8 µm
I	Standard	As Welded	0.8 µm

Code	Tagged
T	Yes
X	No

For Tagged Options customer identification numbers required at time of ordering

Europe: +44 (0)191 4105121 dhprocess@parker.com - North America: +1 608 824 0500 dhpsales.na@parker.com www.parker.com/dhpharma

Parker domnick hunter has a continuous policy of product development and although the Company reserves the right to change specifications, it attempts to keep customers informed of any alterations. This publication is for general information only and customers are requested to contact our Process Filtration Sales Department for detailed information and advice on a products suitability for specific applications. All products are sold subject to the company's Standard conditions of sale.

ENERGOEKONOM spol. s r.o., Wolkerova 433, CZ-250 82 Úvaly, Czech Republic, Tel.: +420 281 981 055, info@energoekonom.cz, www.energoekonom.cz

ZVA Housings

- air / gas

- Sanitary range air / gas housing
- Specifically designed for the Pharmaceutical industry
- Laboratory and pilot scale to large industrial applications
- Flow efficient design with low pressure drop
- Steam jacketed and electrically heated options

Specification

Materials of Construction

- Housing: 316L Stainless Steel
- Seals: EPDM

Surface Finish

- Multis - Basic Specification
  Internal: Inside of outlet assy and distribution box to be mechanically polished 0.8 µm Ra. Immerse entire vessel to achieve 100% pickle and passivation.
  External: Grit blast 5 µm Ra mean
- Multis - Full Specification
  Internal: Electropolish 0.6 µm Ra
  External: Bright Polished 0.4 µm Ra

Maximum Allowable Working Pressure (MAWP) PS

6 barg (87.0 psig)

Maximum Allowable Working Temperature (MAWT) TS

120 °C (248 °F)

Maximum Allowable Working Pressure Steam

3 barg (43.5 psig) @ 144 °C (291 °F)

Total Volume (litres)

031	032	033
31.0	40.0	49.0
051	**052**	**053**
45.0	58.0	72.0

Design Code

Housings designed in accordance with the European Council Pressure Equipment Directive (PED) 97/23/EC and the UK statutory Pressure Equipment Regulations (PER) 1999 N° 2001. PED / PER conformity assessments based on Fluid Group 2 Gas (harmless) including steam. Only housings over PS.V 50 bar / litres bear the CE mark.

Design Basis

ASME VIII Division 1.

Custom Design

Parker domnick hunter offers a specialist and fabrication service allowing individual customer system specifications to be met.

Physical Characteristics

Bowl Height		Dimensions (mm) 'A'	'B'	'C'	Typical Weight (Kg)
10"	(250 mm)	336	794	320	43.0
20"	(500 mm)	336	1044	570	47.0
30"	(750 mm)	336	1294	820	50.0

Dimensions shown are for a ZVACE 3 round, 3" ANSI inlet / outlet connections. For the full range of dimensions and weights, please contact Parker domnick hunter.

Note: All housings are fully vacuum rated.

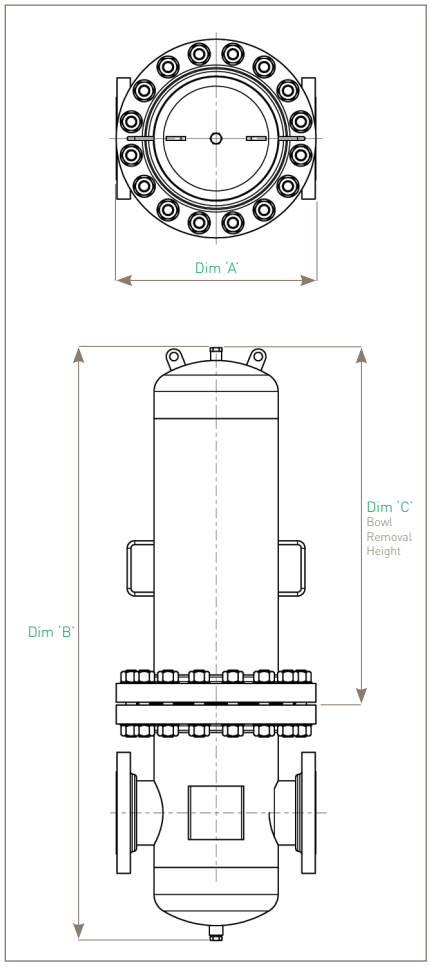

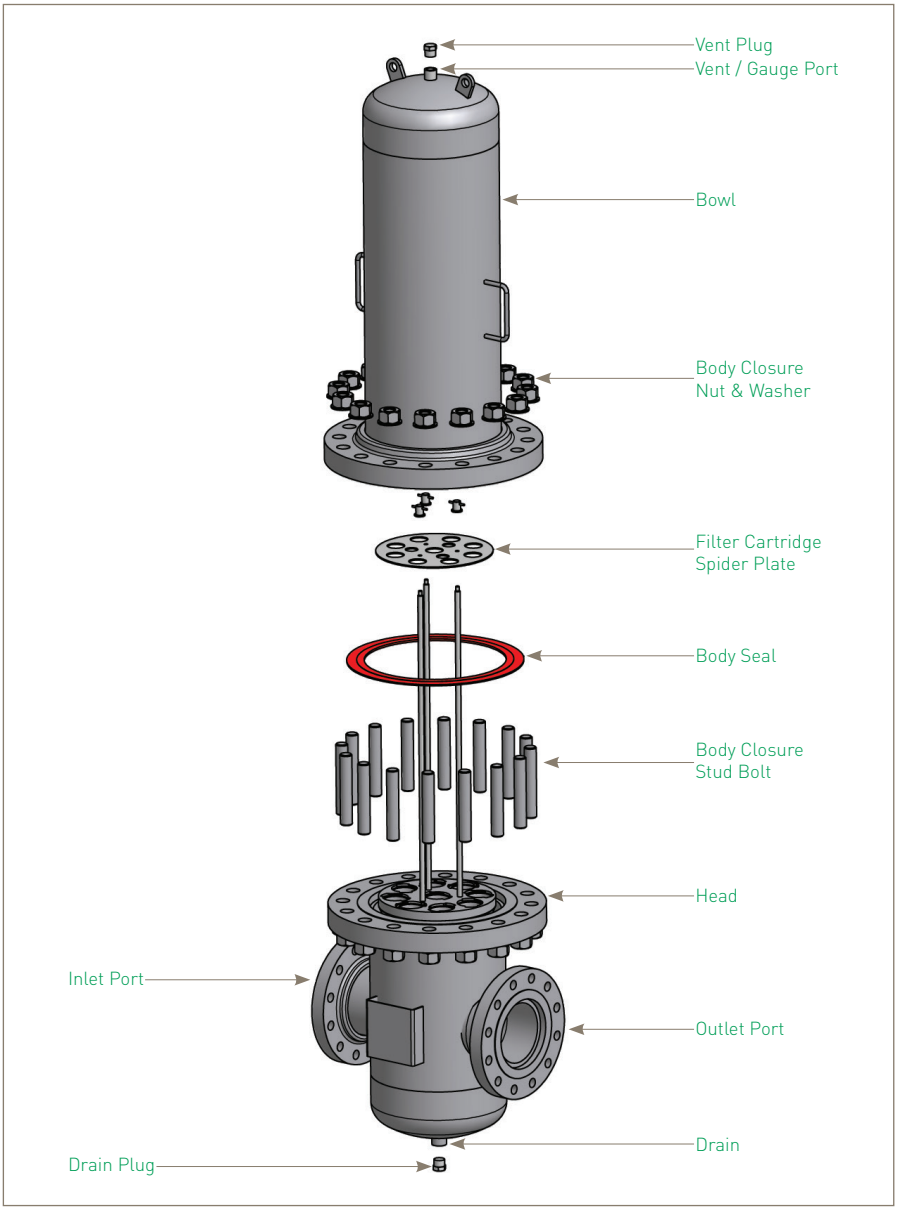

Ordering Information

ZVA [ ] [ ] - [ ] - [ ] [ ] [ ] - [ ] - [ ]

Code	Vessel Class
CE	Standard

Code	N° of Cartridges
03	3
05	5
09	9
15	15

Code	Length (Nominal)
1	10" (250 mm)
2	20" (500 mm)
3	30" (750 mm)

Code	Connection Size
D	3"
E	4"
G	6"
H	8"

Code	Connection Type
F	Flanged
W	Weld Prepared

Code	Connection Standard
A	NPT / ANSI
N	Nominal Bore
I	ISO

Code	Vent / Drain Conn. Type
B	BSPP

Code	Surface Finish
C	Economy Spec
F	Full Spec

Note: For accessories, i.e. gauges, please contact Parker domnick hunter - Process Division for full availability.

Europe: +44 (0)191 4105121 dhprocess@parker.com - North America: +1 608 824 0500 dhpsales.na@parker.com www.parker.com/dhpharma

Parker domnick hunter has a continuous policy of product development and although the Company reserves the right to change specifications, it attempts to keep customers informed of any alterations. This publication is for general information only and customers are requested to contact our Process Filtration Sales Department for detailed information and advice on a products suitability for specific applications. All products are sold subject to the company's Standard conditions of sale.

ENERGOEKONOM spol. s r.o., Wolkerova 433, CZ-250 82 Úvaly, Czech Republic, Tel.: +420 281 981 055, info@energoekonom.cz, www.energoekonom.cz

VIS Housings

- high flow steam

- Specifically designed to maximize flow rates and minimize pressure drop
- Compatible with JUMBO element to maximize steam capacity

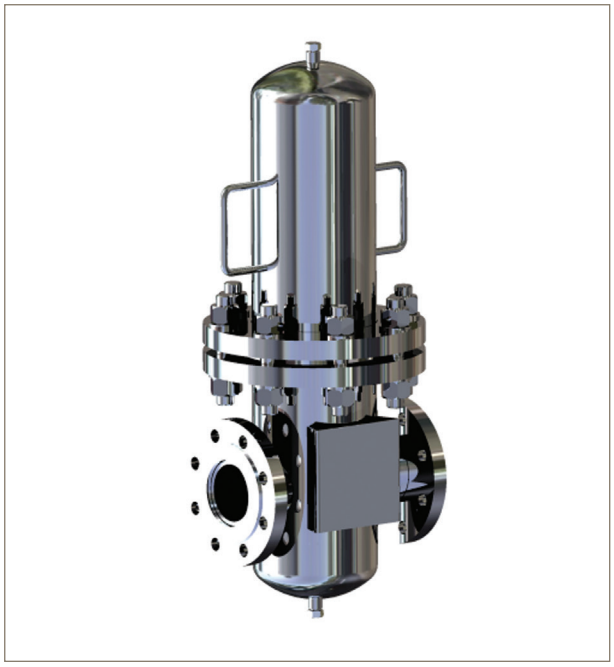

Specification

Materials of Construction

- Housing: 316L Stainless Steel
- Seals: EPDM

Surface Finish

- Internal: Inside of outlet and distribution box to be mechanically mirror polished 0.8 µm Ra. Immerse vessel to achieve 100% pickle and passivation.
- External: Grit blast 5 µm Ra mean

Maximum Allowable Working Pressure (MAWP) PS

7 barg (101.5 psig)

Maximum Allowable Working Temperature (MAWT) TS

170.5 °C (339 °F)

Design Code

Housings designed in accordance with the European Council Pressure Equipment Directive (PED) 97/23/EC and the UK statutory pressure equipment regulations (PER) 1999 N° 2001. PED / PER Conformity assessments based on Fluid Group 2 Gas (harmless) allowing for in-situ steam sterilisation. Only housings over PS.V 50 bar / litres bear the CE mark.

Design Basis

ASME VIII Division 1.

Physical Characteristics

Type	Dimensions (mm) 'A'	'B'	'C'	Typical Weight
VISCE-01J -DD	300	763	310	30.0
VISCE-01J -ED	330	895	140	50.0
VISCE-3J -DD	515	1049	410	100.0
VISCE-3J -ED	700	1237	490	150.0

For the full range of dimensions and weights, please contact Parker domnick hunter.

Note: All housings are fully vacuum rated.

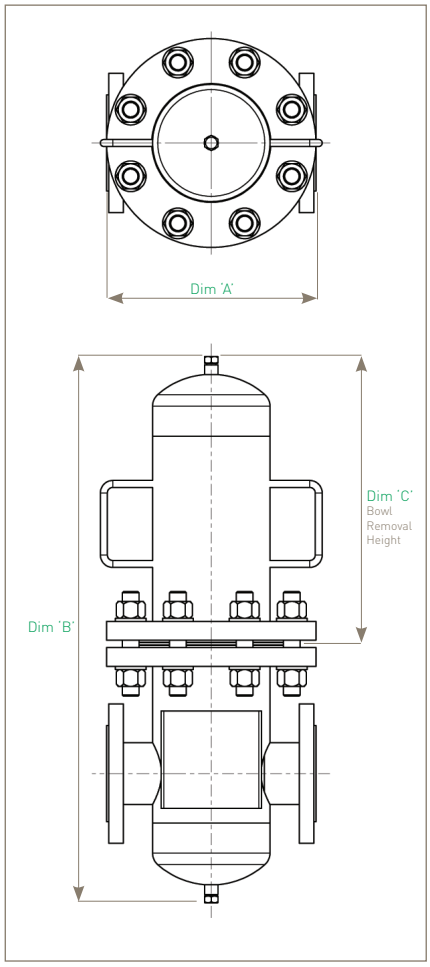

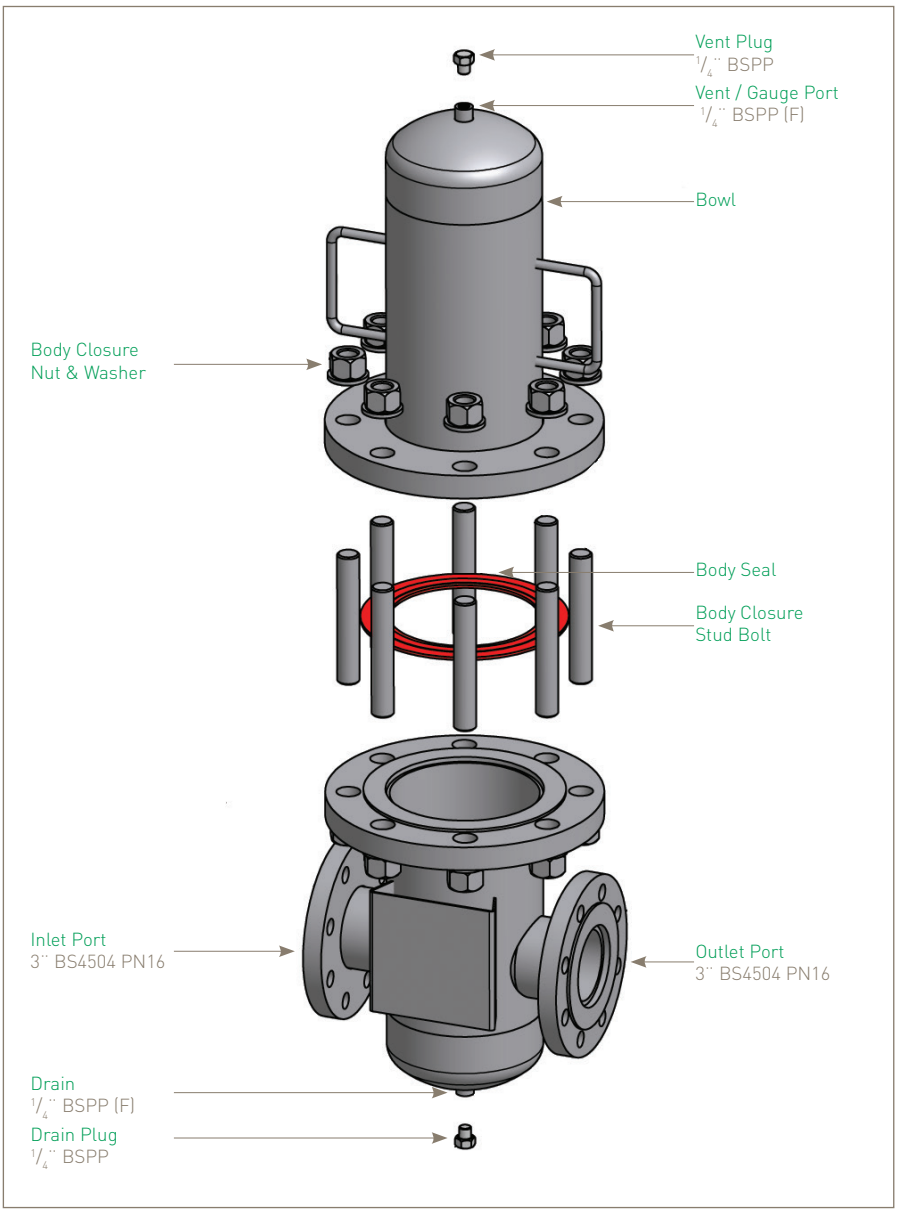

Ordering Information

VIS [ ] - [ ] [ ] - [ ] [ ]

Code	Vessel Class
CE	Standard

Code	N° of Cartridges
01	1
03	3

Code	Length (Nominal)
J	Jumbo

Code	Connection Size
D*	3"
E*	4"
G**	6"
H**	8"

* Single housings only
** Round housings only

Code	Connection Type
D	BS4504 PN16 Flange
A	ANSI cl. 150 Flange

Note: For accessories, i.e. gauges, please contact Parker domnick hunter - Process Division for full availability.

Parker domnick hunter has a continuous policy of product development and although the Company reserves the right to change specifications, it attempts to keep customers informed of any alterations. This publication is for general information only and customers are requested to contact our Process Filtration Sales Department for detailed information and advice on a products suitability for specific applications. All products are sold subject to the company's Standard conditions of sale.

Europe: +44 (0)191 4105121 dhprocess@parker.com - North America: +1 608 824 0500 dhpsales.na@parker.com www.parker.com/dhpharma

ENERGOEKONOM spol. s r.o., Wolkerova 433, CZ-250 82 Úvaly, Czech Republic, Tel.: +420 281 981 055, info@energoekonom.cz, www.energoekonom.cz

VSL Housings

- sanitary liquid

- Multi-element sanitary liquid housing
- Designed specifically for the pharmaceutical industry
- Electropolished internal finish

Specification

Materials of Construction

- Housing: 316L Stainless Steel
- Seals: EPDM

Surface Finish

- Internal: Electropolished 0.4 µm Ra
- External: Polished 0.25 µm Ra

Economy Spec

An economy version is available with a lower specification, external linished to 0.8 µm Ra.

Design Code

Housings designed in accordance with the European Council Pressure Equipment Directive (PED) 97/23/EC and the UK statutory pressure equipment regulations (PER) 1999 N° 2001. PED / PER Conformity assessments based on Fluid Group 2 Gas (harmless) allowing for in-situ steam sterilisation. Only housings over PS.V 50 bar / litres bear the CE mark.

Design Basis

ASME VIII.

Custom Design

Parker domnick hunter offers a specialist and fabrication service allowing individual customer system specifications to be met.

Working Condition PED 97/23/EC			Maximum Pressure		
Fluid Group	State	Temperature	3 / 5 Round	3 / 5 Round	3 / 5 Round
Non Dangerous	Liquids	80 °C (176 °F)	7.00 barg (101.50 psig)	7.00 barg (101.50 psig)	7.00 barg (101.50 psig)
Dangerous / Non Dangerous	Gas / Vapour	144 °C (297 °F)	3.00 barg (43.50 psig)	3.00 barg (43.50 psig)	3.00 barg (43.50 psig)
PED Conformity Assessment Category			CAT I	CAT II	CAT II
Volume (litres)			10.7	18.5	26.3

Physical Characteristics

Type	Dimensions (mm) 'A'	'B'	'C'	Typical Weight
10" (250 mm)	271	493	320	18.0
20" (500 mm)	271	743	570	22.0
30" (750 mm)	271	993	820	26.0

Dimensions shown are for a 3 Round VSL, 2" TCF inlet / outlet connections. For the full range of dimensions and weights, please contact Parker domnick hunter.

Note: All housings are fully vacuum rated.

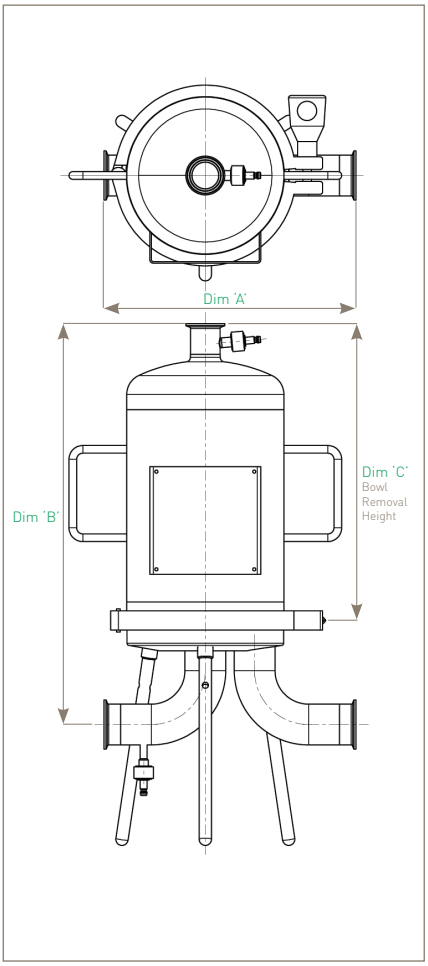

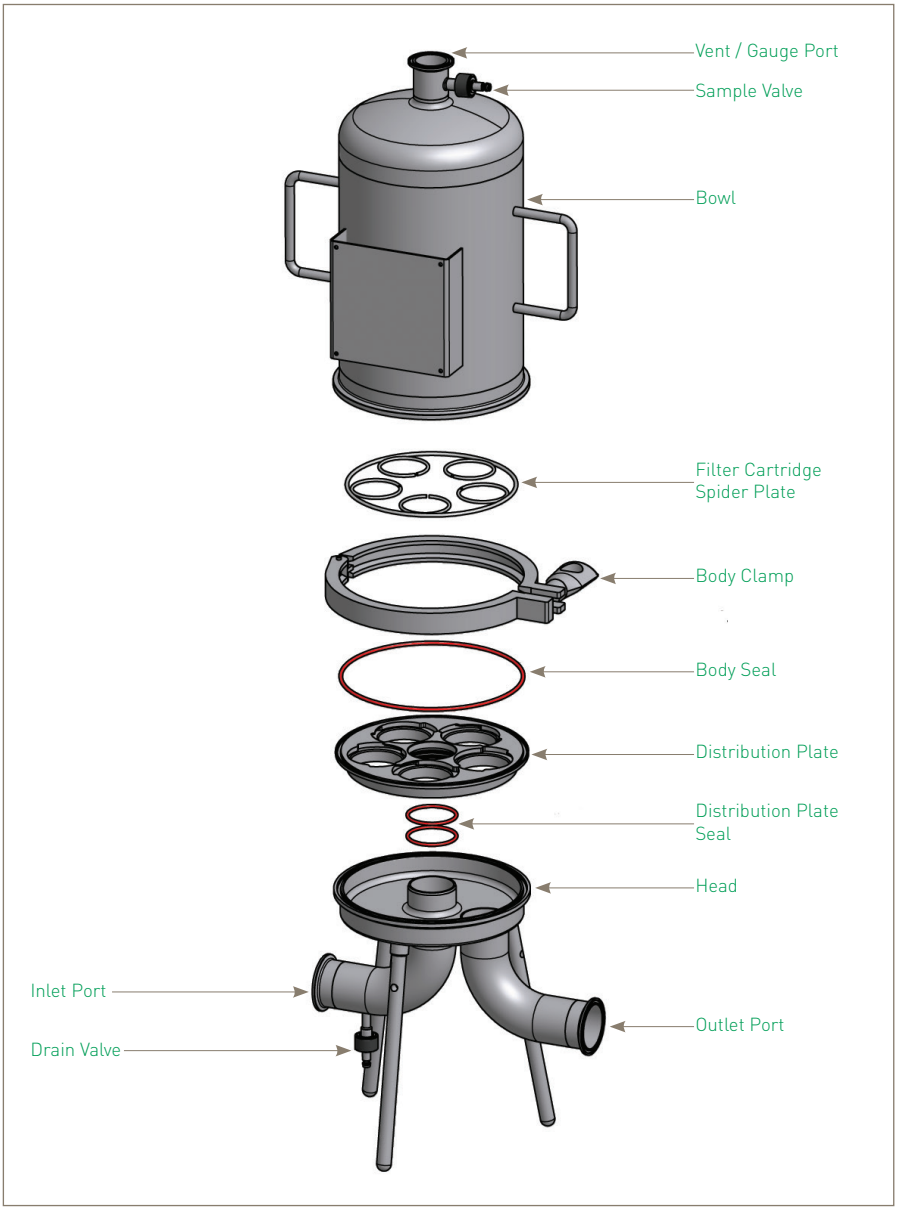

Ordering Information

VSL [ ] [ ] [ ] - [ ] [ ] [ ] - [ ] [ ]

Code	Vessel Class
CE	Standard

Code	N° of Cartridges
03	3
05	5

Code	Length (Nominal)
1	10" (250 mm)
2	20" (500 mm)
3	30" (750 mm)

Code	Connection Size
C	2"

Code	Connection Type
T	Tri-Clamp

Code	Connection Standard
B	British Standard
D	DIN
07*	Economy Series

**Code finishes here, no mention of drain and seals*

Code	Connection Type
B	Sanitary Bleed
T	Tri-Clamp

Code	Seal
E	EPDM
P	PTFE
S	Silicone
V	Viton

Note: For accessories, i.e. gauges, please contact Parker domnick hunter - Process Division for full availability.

Europe: +44 (0)191 4105121 dhprocess@parker.com - North America: +1 608 824 0500 dhpsales.na@parker.com www.parker.com/dhpharma

Parker domnick hunter has a continuous policy of product development and although the Company reserves the right to change specifications, it attempts to keep customers informed of any alterations. This publication is for general information only and customers are requested to contact our Process Filtration Sales Department for detailed information and advice on a products suitability for specific applications. All products are sold subject to the company's Standard conditions of sale.

ENERGOEKONOM spol. s r.o., Wolkerova 433, CZ-250 82 Úvaly, Czech Republic, Tel.: +420 281 981 055, info@energoekonom.cz, www.energoekonom.cz

VIL Multi Filter Housing

- industrial multi liquid

- Multi-element industrial liquid housing
- Laboratory and pilot scale to large industrial applications
- Flow efficient design with low pressure drop

Applications

- General prefiltration duties of low hazard Group 2 chemicals including edible oils, coolants and cutting oils.
- General prefiltration of water and drinks in the Food & Beverage industry.

Specification

Materials of Construction

- Housing: 316L Stainless Steel
- Seals: EPDM

Surface Finish

- Internal / External:
  - DOE Economy: As fabricated then pickled to remove weld discolouration
  - DOE Standard: As fabricated then electropolished
  - P-7 (226) o-ring: As fabricated then electropolished

Design Code

Housings designed in accordance with the European Council Pressure Equipment Directive (PED) 97/23/EC and the UK statutory Pressure Equipment Regulations (PER) 1999 N° 2001.

Design Basis

ASME VIII Division 1.

Custom Design

Parker domnick hunter offers a specialist and fabrication service allowing individual customer system specifications to be met.

Working Condition PED 97/23/EC			Maximum Pressure			
Fluid Group	State	Temperature	3 / 5 Round	8 Round	12 Round	
Non Dangerous	Liquids	80 °C (176 °F)	10.00 barg (145.00 psig)	8.50 barg (123.00 psig)	6.00 barg (87.00 psig)	
PED Conformity Assessment Category			SEP	SEP	SEP	
Volume (litres)			031	032	033	
			14.0	19.0	24.0	
			051	052	053	054
			20.0	28.0	36.0	44.0
			082	083	084	
			70.0	87.0	104.0	
			122	123	124	
			98.0	122.0	146.0	

Physical Characteristics

Type	Dimensions (mm) 'A'	'B'	'C'	Typical Weight
10" (250 mm)	222	720	70	14.0
20" (500 mm)	222	970	70	16.0
30" (750 mm)	222	1220	70	18.0
40" (1000 mm)	222	1470	70	20.0

Dimensions shown are for a 3 Round VIL, 2" BSPP inlet / outlet connections. For the full range of dimensions and weights, please contact Parker domnick hunter.

Note: All housings are fully vacuum rated.

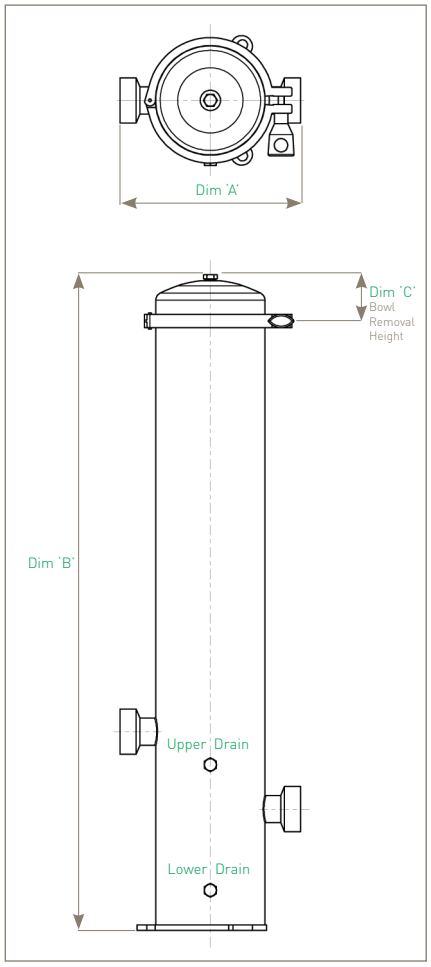

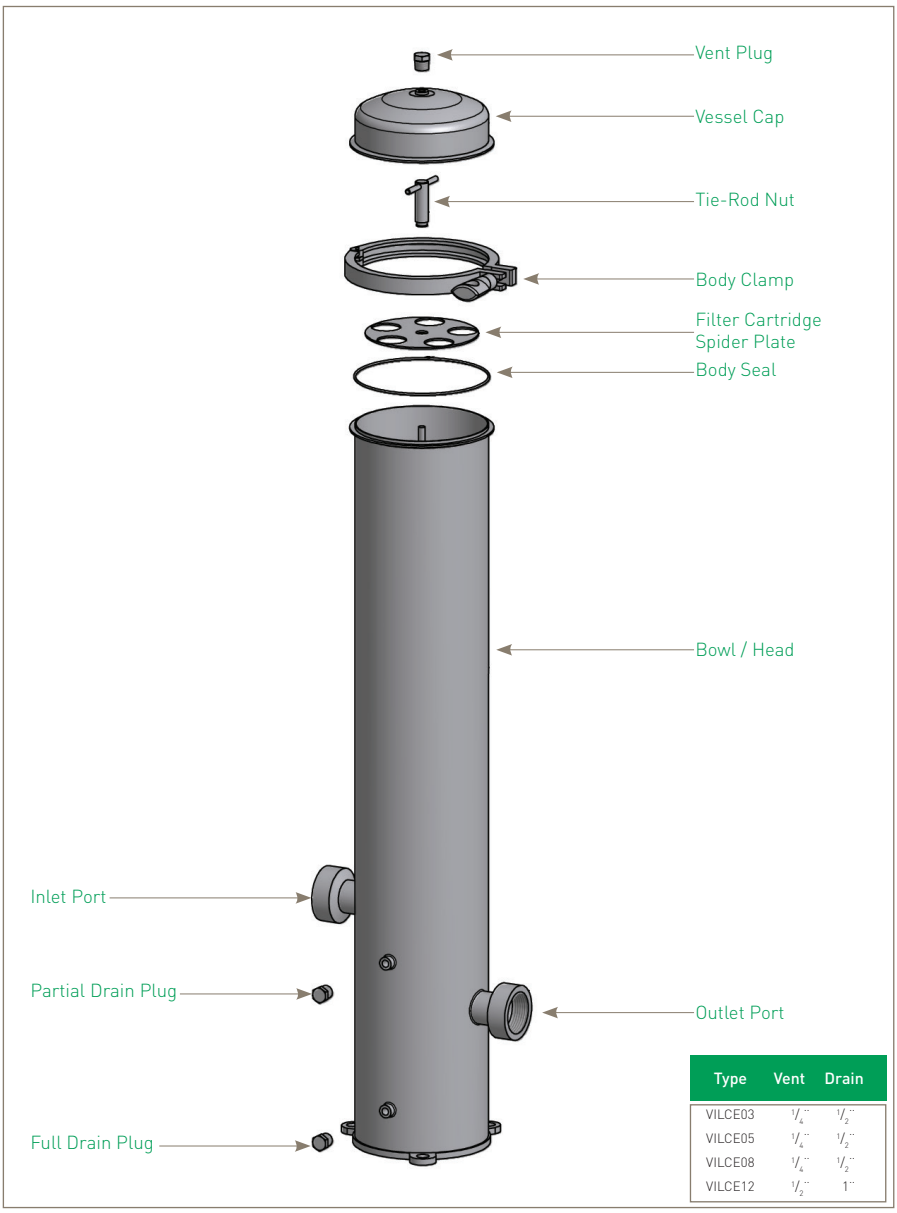

Type	Vent	Drain
VILCE03	1/4"	1/2"
VILCE05	1/4"	1/2"
VILCE08	1/4"	1/2"
VILCE12	1/2"	1"

Ordering Information

VIL [ ] [ ] [ ] [ ] [ ] [ ] [ ] [ ] [ ] [ ]

Code	Vessel Class
CE	Standard

Code	N° of Cartridges
03	3
05	5
08	8
12	12
15°	15

° *Slimline only*

Code	Length (Nominal)
1	10" (250 mm)
2	20" (500 mm)
3	30" (750 mm)
4	40" (1000 mm)

Code	Connection Size
C	2"
D	3"
E	4"

Code	Connection Type
B	BSPP Female
F	Flanged
N	NPT Female

Code	Connection Style
B	DOE
C	P-7

Code	Seals
E	EPDM
P***	PTFE
S	Silicone
V	Viton

Code	Surface Finish
E	Electropolished
P**	Pickled

Code	Flange Type*
15	ANSI cl. 150
45	BS4504

Code	Cartridge Length (Pdh standard)
S	Slimline L 10", 20", 30", 40"

Note: For accessories, i.e. gauges, please contact Parker domnick hunter - Process Filtration for full availability.

*Note: * Only applicable for housings with flange connection type*
*** Pickled finish option only available for DOE housings*
**** PTFE seal option requires flanged closure*

Europe: +44 (0)191 4105121 dhprocess@parker.com - North America: +1 608 824 0500 dhpsales.na@parker.com www.parker.com/dhpharma

Parker domnick hunter has a continuous policy of product development and although the Company reserves the right to change specifications, it attempts to keep customers informed of any alterations. This publication is for general information only and customers are requested to contact our Process Filtration Sales Department for detailed information and advice on a products suitability for specific applications. All products are sold subject to the company's Standard conditions of sale.

ENERGOEKONOM spol. s r.o., Wolkerova 433, CZ-250 82 Úvaly, Czech Republic, Tel.: +420 281 981 055, info@energoekonom.cz, www.energoekonom.cz

Parker domnick hunter provide a comprehensive range of pressure gauges to support their standard air / gas and liquid housings.

HIL Pressure Gauge

Type	Connection	Pressure	Ordering Code
All stainless steel wetted parts with glycerine fill fluid. Design temperature 135 °C (275 °F). Cooling tower required for temperatures up to 205 °C (401 °F). See spares page 74.	1/4" BSP	0 - 10 barg	XPGSS03BS17
		0 - 16 barg	XPGSS03BS18
	1/4" NPT	0 - 10 barg	XPGSS03NP2
		0 - 16 barg	XPGSS03NP3

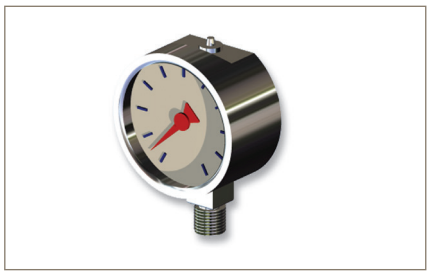

HBA & HIF Pressure Gauge

Type	Connection	Pressure	Ordering Code
All stainless steel wetted parts with glycerine fill fluid (includes adapter for plain 1/4" BSPP connection). Design temperature 135 °C (275 °F). Cooling tower required for temperatures up to 205 °C (401 °F). See spares page 74.	1/4" BSP	0 - 10 barg	XPGSS03BS15
		0 - 16 barg	XPGSS03BS16
	1/4" NPT	0 - 10 barg	XPGSS03NP2
		0 - 16 barg	XPGSS03NP3

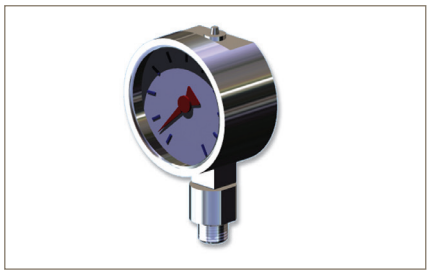

HSL Single & VSH Multi Pressure Gauge

Type	Pressure / Temperature	Ordering Code
Sanitary gauge with double sanitary valves and sight glass for beverage applications. Glycerine gauge fill fluid.	0 - 10 barg / 150 °C (302 °F)	XGSSS08TC1

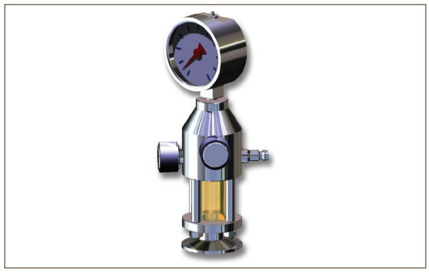

HSL Single & VSH Multi Pressure Gauge Valve Manifold

Type	Pressure / Temperature	Ordering Code
Sanitary gauge manifold with double sanitary valves without sight glass, for applications where glass not allowed. (Manifold and quick release only. Does not include gauge, clamp and seal)	0 - 10 barg / 150 °C (302 °F)	XMISS06TC1

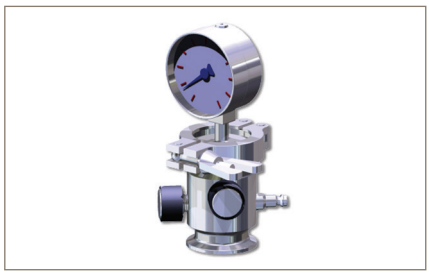

HSL Single & VSH Multi Pressure Gauge

Type	Pressure / Temperature	Ordering Code
Sanitary gauge with single sanitary valve. Glycerine gauge fill fluid.	0 - 10 barg / 150 °C (302 °F)	XPGSS08TC1

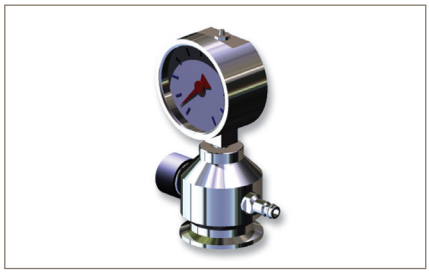

Single, VSH & VSL Multi Pressure Gauge

Type	Pressure / Temperature	Ordering Code
Sanitary gauge with 1" and 1 1/2" tri-clamp connection and hygienic diaphragm. All stainless steel wetted parts with KN92 FDA approved fill fluid.	0 - 10 barg / 150 °C (302 °F)	XPGSS06TC4

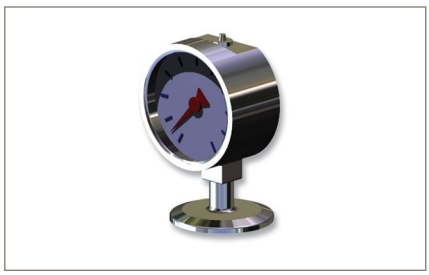

Europe: +44 (0)191 4105121 dhprocess@parker.com - North America: +1 608 824 0500 dhpsales.na@parker.com www.parker.com/dhpharma

Parker domnick hunter has a continuous policy of product development and although the Company reserves the right to change specifications, it attempts to keep customers informed of any alterations. This publication is for general information only and customers are requested to contact our Process Filtration Sales Department for detailed information and advice on a products suitability for specific applications. All products are sold subject to the company's Standard conditions of sale.

ENERGOEKONOM spol. s r.o., Wolkerova 433, CZ-250 82 Úvaly, Czech Republic, Tel.: +420 281 981 055, info@energoekonom.cz, www.energoekonom.cz

Parker domnick hunter provide a comprehensive range of manual valves to support their standard air / gas and liquid housings.

Industrial 1 Piece Ball Valve

Type	Connection	Ordering Code
316 stainless steel 1 piece ball valve with PTFE ball. Male / female.	1/4" BSP	XVASS03BS
	1/4" NPT	XVASS03NP

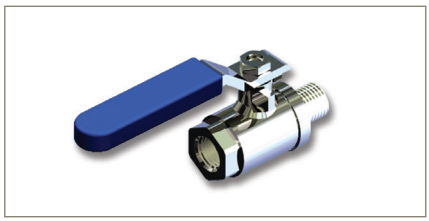

2 Piece Ball Valve

Type	Connection	Ordering Code
316 stainless steel semi-sanitary ball valve. (for use on up-stream connection on sanitary liquid beverage or pharamceutical housings	1 / 1 1/2" Tri-Clamp - 20 mm Hosebarb	XVASS06TC

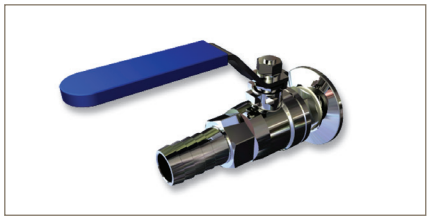

Butterfly Valves

Type	Variant	Ordering Code
Stainless steel butterfly valve with silicone seals and polymer handle.	1" OD x 1.6 Weld End	XVASS05OD1/VHPL
	1 1/2" OD x 1.6 Weld End	XVASS06OD1/VHPL
	2" OD x 1.6 Weld End	XVASS07OD1/VHPL
	2 1/2" OD x 1.6 Weld End	XVASS08OD1/VHPL
	3" OD x 1.6 Weld End	XVASS09OD1/VHPL
	DN25 DIN11851	XVASS05DN1/VHPL
	DN40 DIN11851	XVASS06DN1/VHPL
	DN50 DIN11851	XVASS07DN1/VHPL
	DN65 DIN11851	XVASS08DN1/VHPL
	DN80 DIN11851	XVASS09DN1/VHPL
	1" Tri-clamp Ferrule	XVASS05TC4/VHPL
	1 1/2" Tri-clamp Ferrule	XVASS06TC4/VHPL
	2" Tri-clamp Ferrule	XVASS07TC4/VHPL
	2 1/2" Tri-clamp Ferrule	XVASS08TC4/VHPL
	3" Tri-clamp Ferrule	XVASS09TC4/VHPL

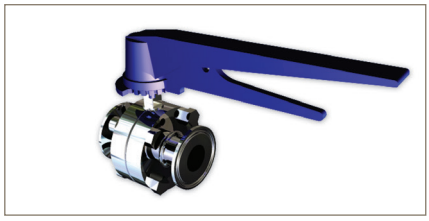

Sanitary Bleed Valve

Type	Seals	Variant	Ordering Code
316 stainless steel sanitary bleed valve with Neoprene grip. Available with EPDM, Silicon, Viton or Perlast Seals. Available with Rectus 21, Staubli RBE03 or 8 mm hosebarb.	EPDM	Staubli RBE03 Male	XVASS30NA1
		Rectus 21 Male	XVASS30RT
		8 mm Hosebarb	XVASS30HB
	Silicone	Staubli RBE03 Male	XVASS30ST1
		Rectus 21 Male	XVASS30RT1
		8 mm Hosebarb	XVASS30HB1
	Viton	Staubli RBE03 Male	XVASS30NA4
		Rectus 21 Male	XVASS30RT2
		8 mm Hosebarb	XVASS30HB2
	Perlast	Staubli RBE03 Male	XVASS30NA2
		Rectus 21 Male	XVASS30RT3
		8 mm Hosebarb	XVASS28SL15

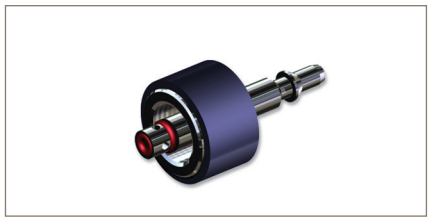

Sample Valve

Type	Connection	Ordering Code
316 stainless steel sanitary valve with 1" / 1 1/2" tri-clamp connection and 12 mm hosebarb. For use on down-stream connection on sanitary liquid housings.	1 / 1 1/2" Tri-Clamp - Stepped 12 mm Hosebarb	XVASS05TC3

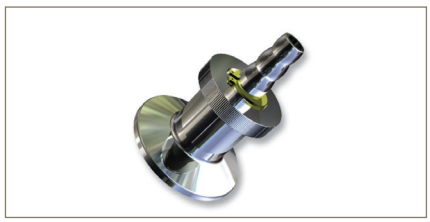

Gemu Diaphragm Valve

Type	Connection	Variant	Ordering Code
316 stainless steel sanitary diaphragm valve with 1/2" (miniclamp) tri-clamp connection and silicone or EPDM diaphragm.	1/2" (miniclamp) tri-clamp	Silicone	XVASS04TC6
		EPDM	XVASS04TC1
		Viton	XVASS04TC7
		PTFE	XVASS04TC8

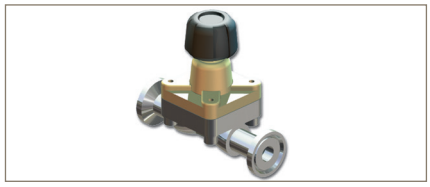

Parker domnick hunter has a continuous policy of product development and although the Company reserves the right to change specifications, it attempts to keep customers informed of any alterations. This publication is for general information only and customers are requested to contact our Process Filtration Sales Department for detailed information and advice on a products suitability for specific applications. All products are sold subject to the company's Standard conditions of sale.

Europe: +44 (0)191 4105121 dhprocess@parker.com - North America: +1 608 824 0500 dhpsales.na@parker.com www.parker.com/dhpharma

ENERGOEKONOM spol. s r.o., Wolkerova 433, CZ-250 82 Úvaly, Czech Republic, Tel.: +420 281 981 055, info@energoekonom.cz, www.energoekonom.cz

Spares

Parker domnick hunter provide a comprehensive range of spare parts to support their standard air / gas and liquid housings.

4" Spares	
Size & Type	**Part Code**
4" Single Pin Tri-Clamp 4" Double Bolt Tri-Clamp	XTCSS10SL XTCSS10HP15
4" TCF Gasket EPDM 4" TCF Gasket Silicone 4" TCF Gasket Viton 4" Gasket PTFE	XTSEP10IL XTSSI10SL XTSVI10SL XTSPT10SL
HIL 222 Spring HIL DOE Nut	XSNSS07OD XNTSS01IL

2 1/2" Spares	
Size & Type	**Part Code**
2 1/2" Single Pin Tri-Clamp 2 1/2" Double Bolt Tri-Clamp	XTCSS08SA XTCSS08HP
2 1/2" TCF Gasket EPDM 2 1/2" TCF Gasket Silicone 2 1/2" TCF Gasket Viton 2 1/2" Gasket PTFE	XGKEP08NA XGKSI08 XGKVI08SA XGKPT10SA

2 1/2" & 4" Spares	
Size & Type	**Part Code**
1/4" BSP Plug 1/4" NPT Plug	XPLSS03BS4 XPLSS03NP1
1/4" BSP PTFE Plug Seal	XGKPT03BP
ATEX Earth Kit (Replacement)	XEKSS00AT
1 1/2" Tri-Clamp Blanking Kit - EPDM 1 1/2" Tri-Clamp Blanking Kit - Silicone 1 1/2" Tri-Clamp Blanking Kit - Viton 1 1/2" Tri-Clamp Blanking Kit - PTFE	XAKSS06TC6 XAKSS06TC3 XAKSS06TC7 XAKSS06TC8
1/2" Tri-Clamp Blanking Kit - EPDM 1/2" Tri-Clamp Blanking Kit - Silicone 1/2" Tri-Clamp Blanking Kit - Viton 1/2" Tri-Clamp Blanking Kit - PTFE	XAKSS04TC1 XAKSS04TC2 XAKSS04TC3 XAKSS04TC4
1 1/2" Tri-Clamp Gasket - EPDM 1 1/2" Tri-Clamp Gasket - Silicone 1 1/2" Tri-Clamp Gasket - Viton 1 1/2" Tri-Clamp Gasket - PTFE	XGKEPTC XTSSI06 XGKVI06TC2 XGKPT06TC
1/2" Tri-Clamp Gasket - EPDM 1/2" Tri-Clamp Gasket - Silicone 1/2" Tri-Clamp Gasket - Viton 1/2" Tri-Clamp Gasket - PTFE	XGKEP04TC1 XGKSI04TC XGKVI04TC XGKPT04TC
Sanitary Seal Kit - EPDM Sanitary Seal Kit - Silicone Sanitary Seal Kit - Viton Sanitary Seal Kit - Perlast	XOREP30 XORSI30 XORVI30 XORPE30NA1
1 1/2" TC Blank 1 1/2" TC Clamp	XTBSS05TC XTCSS05TC
1/2" TC Blank 1/2" TC Clamp	XTBSS04TC XTCSS04TC
Cooling Tower 1/4" BSPP Cooling Tower 1/4" NPT	XCTSS03BS XCTSS03NP

3 Round VSH Spares	
Size & Type	**Part Code**
3 Round Body 'V' Clamp	XBCSS51BL
3 Round Spider Plate	XSPSS51BL
Body O-Ring BS362 - Silicone	XORSI12BL
1 1/2" Head to Elbow Gasket - PTFE	XGKPT06BL

5 Round VSH Spares	
Size & Type	**Part Code**
5 Round Body 'V' Clamp	XBCSS52BL
5 Round Spider Plate	XSCSS52BL
Body O-Ring BS370 - Silicone	XORSI12BL1
2" Head to Elbow Gasket - PTFE	XGKPT07

8 Round VSH Spares	
Size & Type	**Part Code**
8 Round Body 'V' Clamp	XBCSS53BL
8 Round Spider Plate	XSPSS52BL
Body O-Ring BS378 - Silicone	XORSI13BL
3" Head to Elbow Gasket - PTFE	XGKPT09BL

VSH Spares	
Size & Type	**Part Code**
3, 5 & 8 Round Vent and Drain Clamp / Gasket Kit	XAKSS06TC5

Certificates

Parker domnick hunter provide a comprehensive range of certificates to support their standard air / gas and liquid housings.

Certificate	
Type	**Ordering Code**
Vessel Inspection Certificate (included with vessel)	60 950 0013
Vessel Inspection Certificate (replacement)	60 950 0013
Material Certification Pack (EN10204 3.1)	60 950 0014
Certificate of Conformity	60 950 0015
Passivation Report	60 950 0016
Cleanliness Certificate	60 950 0017
Surface Finish Certificate	60 950 0018
Weld Procedure Certificate Pack	60 950 0019
Quality Plan	60 950 0026
Replacement IOMI (Installation, Operation and Maintenance Instructions)	17 950 0769

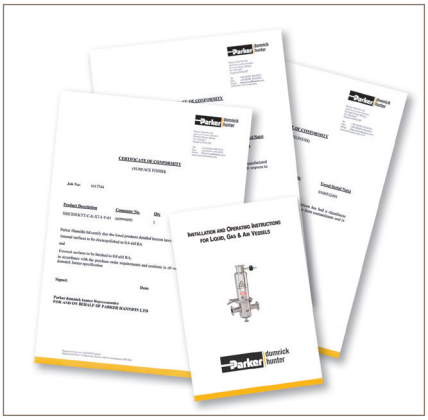

Parker domnick hunter has a continuous policy of product development and although the Company reserves the right to change specifications, it attempts to keep customers informed of any alterations. This publication is for general information only and customers are requested to contact our Process Filtration Sales Department for detailed information and advice on a products suitability for specific applications. All products are sold subject to the company's Standard conditions of sale.

Europe: +44 (0)191 4105121 dhprocess@parker.com - North America: +1 608 824 0500 dhpsales.na@parker.com www.parker.com/dhpharma

ENERGOEKONOM spol. s r.o., Wolkerova 433, CZ-250 82 Úvaly, Czech Republic, Tel.: +420 281 981 055, info@energoekonom.cz, www.energoekonom.cz

TURBOSEP

- mechanical separator
- off-gas filtration

TURBOSEP is a key part of Parker domnick hunter's filtration solutions for fermentation applications.

Specifically designed for the removal of foam aggregate and aerosol from fermenter off-gas, TURBOSEP improves the overall efficiency of the fermentation process and facilitates the effective operation of final sterilizing grade filters.

This highly efficient mechanical separator has no moving parts and very low pressure drop. Foam, aerosol and entrained liquid removal from the off-gas are returned to the fermenter housing thereby minimizing product loss.

TURBOSEP is a patented product of Parker domnick hunter.

Note: TURBOSEP is a registered trademark of Parker domnick hunter

Features and Benefits

- Highly efficient separation of liquid and foam from off-gas
- Increases fermenter capacity by up to 30%
- Protection of off-gas filters for extended life
- Reduction in antifoam usage of up to 70%
- Continuous operation of the fermenter throughout the foaming process
- Improved downstream processing efficiency through reduced antifoam consumption

Installation of TURBOSEP

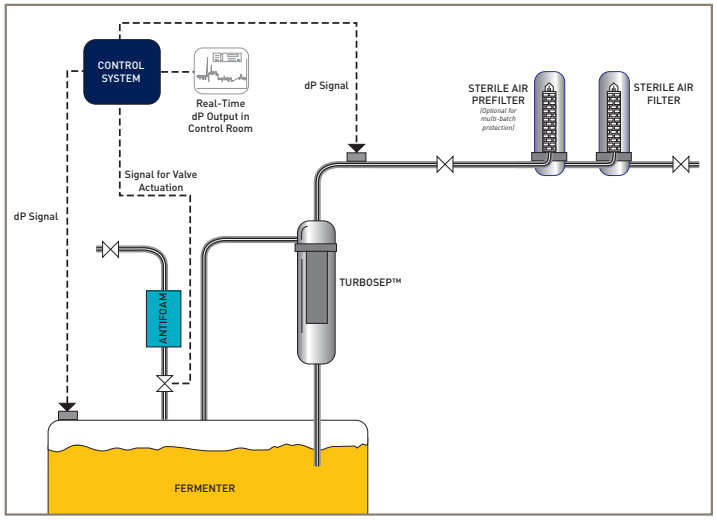

Typical Installation

When off-gas exits the fermenter it enters the TURBOSEP unit. Fixed turbine blades spin the incoming air forcing foam and liquid to the outer walls.

The off-gas then flows across a specially designed impingement plate and spirals down the wall of the TURBOSEP. The off-gas is now free of foam and entrained liquid and exits the TURBOSEP.

Applications
TURBOSEP can be employed in any fermentation application where the creation of foam is causing process control problems. This includes:

- Healthcare products (e.g. penicillin, cephalosporin)
- Food and feed additives (e.g. lysine, M.S.G.)
- Organic chemicals (e.g. citric acid)
- Enzymes (e.g. proteases, carbohydrases)

Process Optimization
When employed with a differential pressure monitoring unit, TURBOSEP optimizes the fermentation process by utilizing off-gas separation and antifoam injection.

When foam-over occurs, foam and liquid entering the TURBOSEP cause an increase in the differential pressure monitoring unit which triggers the controlled release of antifoam, at a predetermined level of foam-over, into the fermenter.

This process control system has proven to substantially reduce the levels of antifoam required to control foam-over and has led to fermenter capacity being increased in many applications.

Validated cleaning via internal spray balls

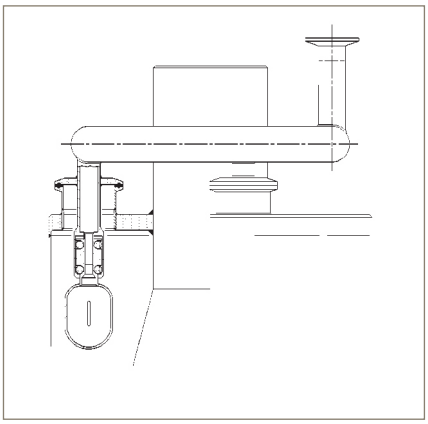

Ordering Information

TURBOSEP sizing is normally based upon the completion of a TURBOSEP questionnaire available from Parker domnick hunter. Below we give an indication of the product range based on the typical gas flow (actual rather than normalized) through the fermenter.

Each TURBOSEP is tailor made to its application to ensure maximum effectiveness in operation and overcome critical issues with respect to installation.

Typical Process Flow Rate (A l / min)	(Acfm)	TURBOSEP Code	Pipe Connection *1
200	7.0	ZVT-200-BTE	$^3/_4$" Tri-Clamp
500	17.7	ZVT-500-BTE	1" Tri-Clamp
1000	35.0	ZVT-1K-BTE	$1^1/_2$" Tri-Clamp
2000	71.0	ZVT-2K-CTE	2" Tri-Clamp
3000	105.0	ZVT-3K-CTE	$2^1/_2$" Tri-Clamp

Typical Process Flow Rate (A m³ / min)	(Acfm)	TURBOSEP Code	Pipe Connection *2
5	176	ZVT-5K	3" Weld Prepared
10	350	ZVT-10K	4" Weld Prepared
20	707	ZVT-20K	6" Weld Prepared
40	1414	ZVT-40K	8" Weld Prepared
60	2118	ZVT-60K	10" Weld Prepared
90	3177	ZVT-90K	12" Weld Prepared
120	4236	ZVT-120K	14" Weld Prepared

**1 Other connections styles available upon request.*

**2 Pipe size is nominal bore. Connection style options include flange variants.*

Europe: +44 (0)191 4105121 dhprocess@parker.com - North America: +1 608 824 0500 dhpsales.na@parker.com www.parker.com/dhpharma

Parker domnick hunter has a continuous policy of product development and although the Company reserves the right to change specifications, it attempts to keep customers informed of any alterations. This publication is for general information only and customers are requested to contact our Process Filtration Sales Department for detailed information and advice on a products suitability for specific applications. All products are sold subject to the company's Standard conditions of sale.

ENERGOEKONOM spol. s r.o., Wolkerova 433, CZ-250 82 Úvaly, Czech Republic, Tel.: +420 281 981 055, info@energoekonom.cz, www.energoekonom.cz

VALAIRDATA 3

- Integrity Test Unit

The VALAIRDATA 3 is the next generation of fully automated, aerosol challenge integrity test unit, designed to test the integrity of sterile gas filters quickly and easily.

The VALAIRDATA 3 aerosol challenge test is fully correlated to aerosolized *B.diminuta*, *B.subtilis* and *Enterobacteria phage MS2* challenges and is a recommended test methodology in the "PDA's Sterilizing Filtration of Gas – Technical Report #40".

The unit utilizes Parker domnick hunter's 40 year experience in the provision of world leading sterile gas solutions by further improving the usability and sensitivity of the test process and offers significant savings in operator time.

Note: VALAIRDATA is a registered trademark of Parker domnick hunter

Features

- 5.7" TFT LCD touch screen operation
- Multi-language menu availability
- Testing correlated to aerosol and viral challenges
- Developed to GAMP 5 guidelines
- Transfer of data via USB data stick
- 4GB internal memory storage

Physical Parameters

Languages:	English, German, French, Swedish, Spanish, Italian, Portuguese & Danish
Instrument size:	363mm x 155mm x 308mm
Weight:	8 Kg
Power supply:	3.2V / 16Ah & Mains 100-240 VAC : 50 / 60 Hz
Inlet pressure required:	4.5 – 7 barg
Pneumatic connections:	Rectus 21 KA series
Aerosol generation time:	5-600 seconds

Benefits

- Easy to use
- Portable for in-situ teting around the facility
- Quick determination of filter's ability to sterilize gas - 30 second time for 10" housing, 5 seconds for discs
- Increased sensitivity compared to liquid based tests, especially on multi-cartridge systems
- No unit specific PC software required

Instrument Options

	Standard	Secure
Design Environment Approvals	GAMP 5	GAMP 5
21CFR Part 11	No	Yes (transferred data is user's responsibility)
Security User Levels	Operator	Operator - password protected
	Administrator	Administrator - password protected
Audit Trail	No	Yes

Ordering Information

WVA-3 - ☐

Code	Description
ST	Standard
SE	Secure

Parker domnick hunter has a continuous policy of product development and although the Company reserves the right to change specifications, it attempts to keep customers informed of any alterations. This publication is for general information only and customers are requested to contact our Process Filtration Sales Department for detailed information and advice on a products suitability for specific applications. All products are sold subject to the company's Standard conditions of sale.

Europe: +44 (0)191 4105121 dhprocess@parker.com - North America: +1 608 824 0500 dhpsales.na@parker.com www.parker.com/dhpharma

ENERGOEKONOM spol. s r.o., Wolkerova 433, CZ-250 82 Úvaly, Czech Republic, Tel.: +420 281 981 055, info@energoekonom.cz, www.energoekonom.cz

Porecheck 4 Integrity Test Unit

- water intrusion, pressure decay and bubble point testing

The Porecheck 4 is configured for water intrusion testing, pressure decay and bubble point testing. The Porecheck 4 comes in two versions:

'P' Pharmaceutical (CFR) - Allows traceability and audit tracking capability
'C' Certified - comes with password level protection

This market leading system incorporates a range of design features unique to the Porecheck 4 bringing true portability, enhanced ease of use, flexibility and reliability in challenging environments. All this within an instrument fully compliant with 21 CFR Part II.

Note: Porecheck is a registered trademark of Parker Hannifin Corporation.

Features and Benefits

- Designed to 21 CFR Part II and Annex II compliant environments
- Automatic compensation when used on housings located 10 metres above instrument
- Maintains resolution and accuracy regardless of filter system size 0.1 to 32 litres
- Highly portable and mains independent
- Configurable to automatically flush and drain filters
- Robust waterproof stainless steel casing
- Direct attachment to test disposable capsules
- 100 storable test programs defined in blocks

Physical Parameters

Instrument Material	Stainless Steel 1.4301 (AISI 304)
Instrument Size	200 mm x 300 mm x 155 mm : 7.9¨ x 11.8¨ x 6.1¨
Weight	8.6 Kg : 20 lb
Ingress Protection Class	IP54
Power Supply	Re-chargeable Battery (12V / 3.8 Ah) & Mains (90 - 230 VAC : 50 / 60 Hz)
Keyboard	Remote Infrared - Alpha Numeric & Instrument Keypad - Numeric
Inlet Pressure Required	6.5 - 8.0 barg (94 - 116 psig)
Test Pressure Range	350 mbar to 6 barg (87 psig)
Pneumatic Connectors	Stäubli RBE 0.3 Style : Stainless Steel 1.4404 (AISI 316L)
Storage Temperature	2 - 50 °C (35.5 - 122 °F)
Ambient Humidity	1 - 80% RH
Display	LCD - 20 Character x 4 Lines - Back Lit
Printer	Internally Housed Impact Dot Matrix , 24 Characters per Line
Languages	English, French, German, Spanish, Italian & Danish
Software Protection	Stored in Flash - EPROM
Storable Test Programs	Up to 100 (in Flash - EPROM) Stored in 10 Blocks of 10 Programs

Test Accuracy

Water Intrusion Measurement Range (ul / t)	100 - 99999
Resolution (µl)	5
Accuracy (for a 10¨ cartridge @ 4000 µl / min)	5%
Test Pressure (mbar)	350 - 6000
Stabilisation Time	60 - 999 secs
Test Time (t)	30 - 999 secs
Hardware Volume (ml)	1 - 32000
Diffusional Flow Measurement (ml / min)	1 - 999
Resolution (ml / min)	0.1
Accuracy (for a 10¨ cartridge @ 16 ml / min)	5%
Test Pressure (mbar)	350 - 6000
Stabilisation Time	60 - 999 secs
Test Time (t)	30 - 999 secs
Upstream System Volume (ml)	1 - 32000
Bubble Point Measurement Range (mbar)	450 - 5900 (min. 100 mbar above DF test pressure)
Resolution (mbar)	1
Accuracy	1% FS

Instrument Options

	'P' Pharmaceutical	'C' Certified	Documentation
Storable Test Records	40	No	Installation, Operating & Maintenance Manual
USER Accounts	25	Unlimited	Checklist of Supplied Components
Access USER	Access Password & PIN	Open Access	Calibration & Pressure Vessel Certification
Access PROGRAMMER	Access Password & PIN	Access Password	CE Declaration of Conformity
Access ADMINISTRATOR	Access Password & PIN	Access Password	Operational Qualification Support Documentation
Record Output	Printed Records & RS232 Transfer	Printed Record Test Result Only	Laboratory Qualification Results
Audit Trail Record	256 Event Audit Trail	No	Suggested OQ Test Protocol

Europe: +44 (0)191 4105121 dhprocess@parker.com - North America: +1 608 824 0500 dhpsales.na@parker.com www.parker.com/dhpharma

Parker domnick hunter has a continuous policy of product development and although the Company reserves the right to change specifications, it attempts to keep customers informed of any alterations. This publication is for general information only and customers are requested to contact our Process Filtration Sales Department for detailed information and advice on a products suitability for specific applications. All products are sold subject to the company's Standard conditions of sale.

ENERGOEKONOM spol. s r.o., Wolkerova 433, CZ-250 82 Úvaly, Czech Republic, Tel.: +420 281 981 055, info@energoekonom.cz, www.energoekonom.cz

Endcap styles

Cartridge endcaps

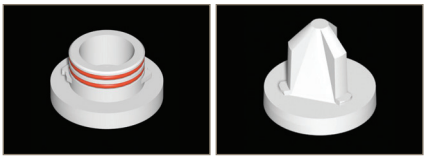

A Style 223 o-rings

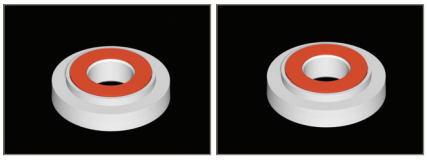

B, L Style Flat Gaskets

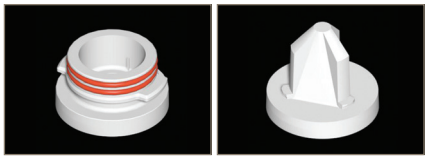

C Style 226 o-rings

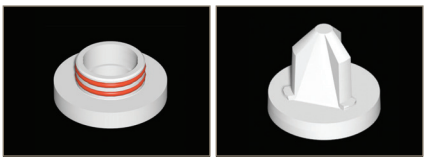

D Style 222 o-rings

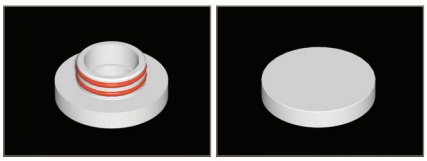

E Style 222 o-rings

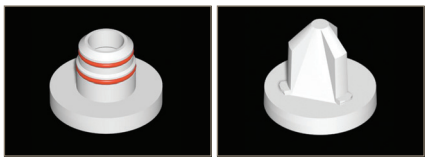

F Style 216 / 218 o-rings

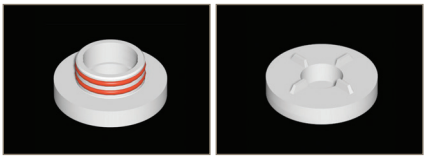

G Style 222 o-rings

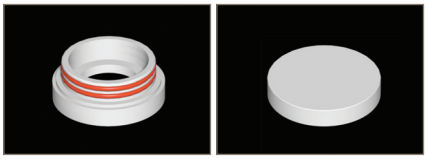

H Style 54 mm ID
x 4 mm o-rings

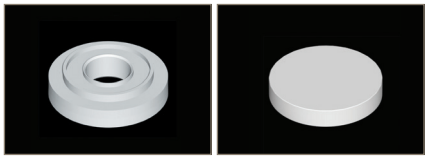

J Style S.O.E.

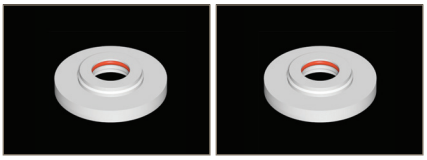

K Style 214 o-rings
(internal)

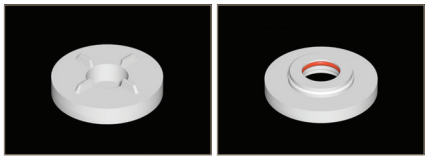

N Style 213 o-rings
(internal)

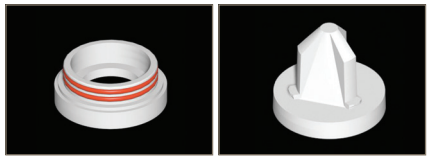

P Style 227 o-rings

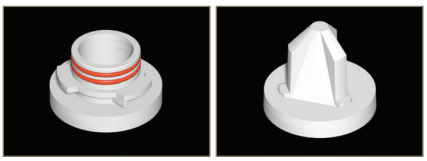

R Style 222 o-rings

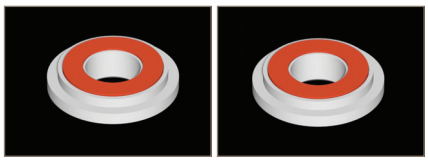

S Style Flat Gaskets

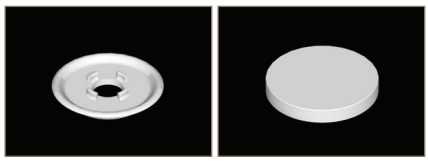

SK Style
(demi only)

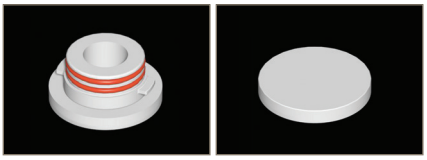

T Style 126 o-rings
(demi only)

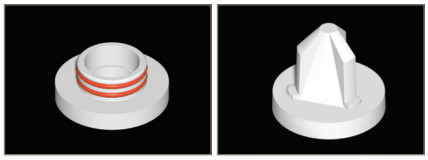

U Style 222 o-rings

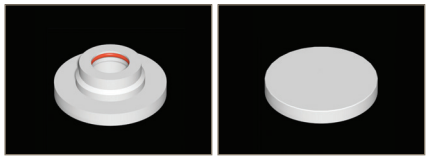

W Style 111 o-rings
(demi only)

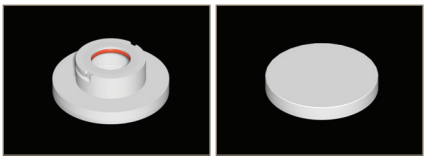

X Style 116 o-rings
(demi only)

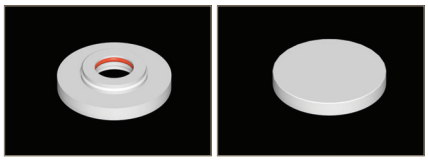

Y Style 116 o-rings
(internal) (demi only)

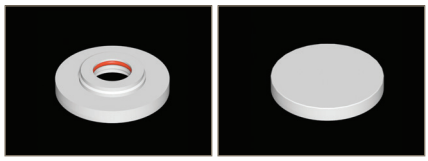

Z Style 116 o-rings
(internal) (demi only)

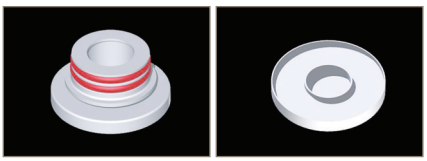

Demi H Style 217 o-rings
(demi only)

Endcap styles

Endcap cross reference chart

Parker domnick hunter	PA	MI	SA
B	MCY 10¨	F	23
C (10¨ Size)	7	7	25
C (K Size)	2		
D	8	5	26
E / G	E = 3 / G = 25	0	27
F	MYS	8	24
L	MCY 20¨ and above	F	23
R			28
X			
Y	MCY2230		
Z	MCY2230 / 4463		

Cartridge dimensions

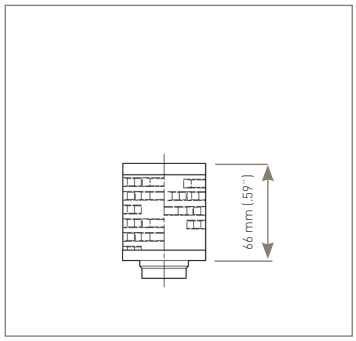

'B' Size

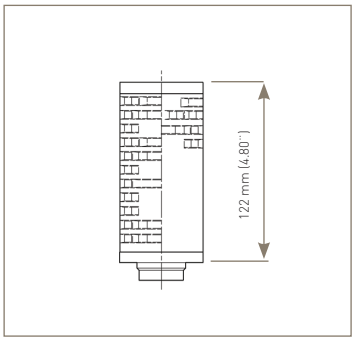

'A' Size

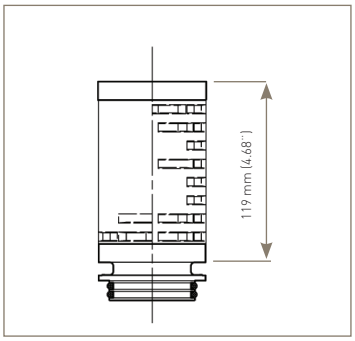

'K' Size

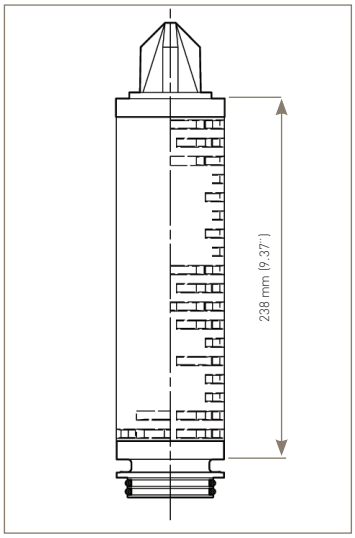

10¨ Size

DEMICAP styles

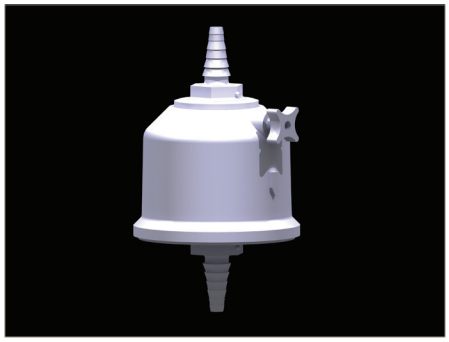

Stepped Hosebarb (Code G)

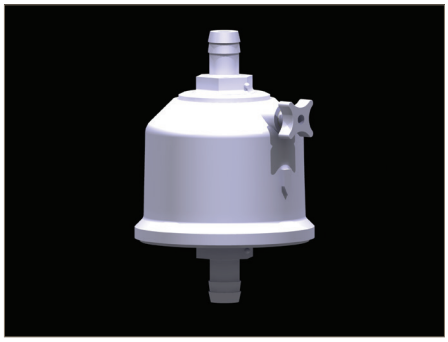

$^1/_2$" Hosebarb (Code H)

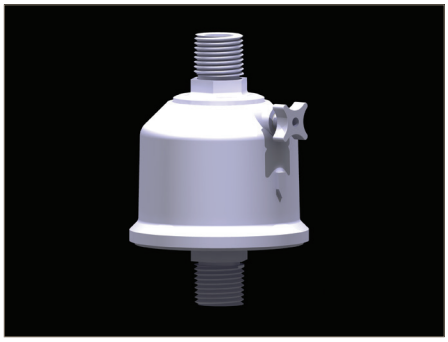

$^1/_4$" NPT (Code N)

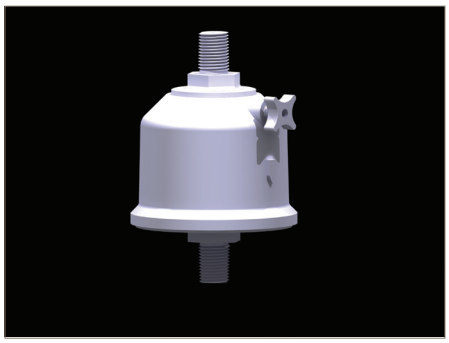

$^1/_2$" NPT (Code M)

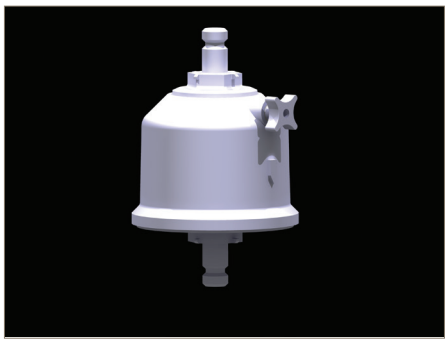

Walther Male (Code Q)

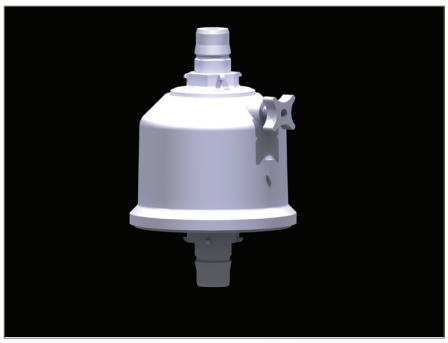

Gromelle (Code R)

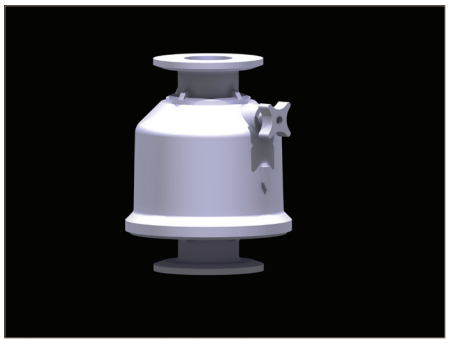

1" Tri-clamp (Code T)

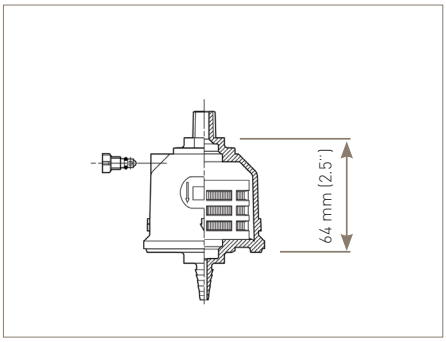

'E' Size

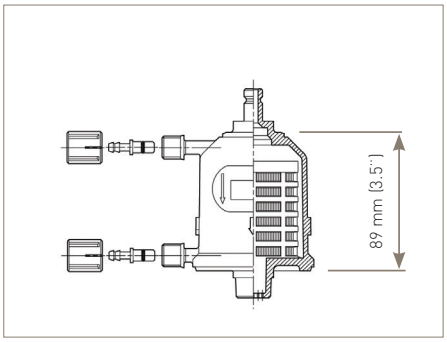

'B' Size

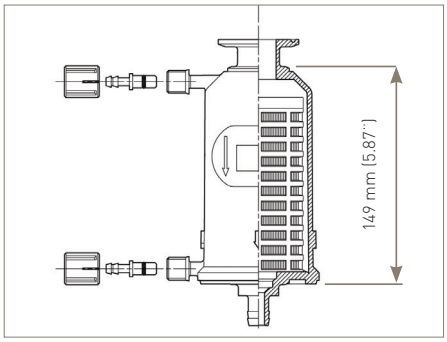

'A' Size

DEMICAP styles

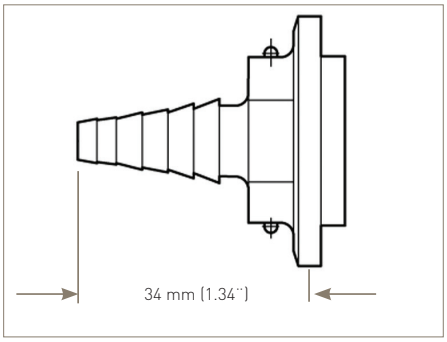

Stepped Hosebarb (Code G)

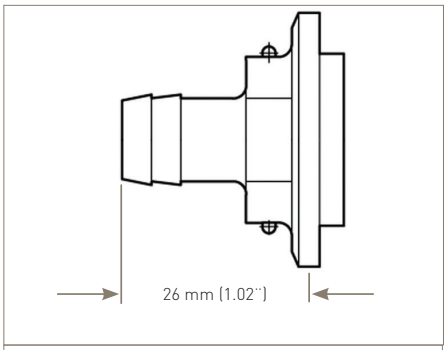

$^1/_2$¨ Hosebarb (Code H)

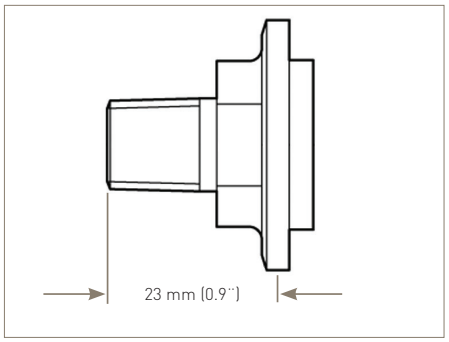

$^1/_2$¨ NPT (Code N)

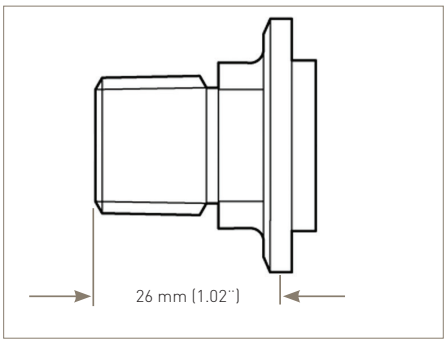

$^1/_4$¨ NPT (Code M)

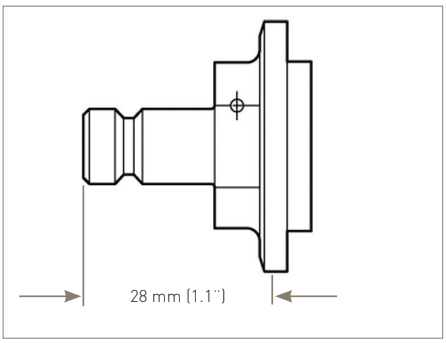

Walther Male (Code Q)

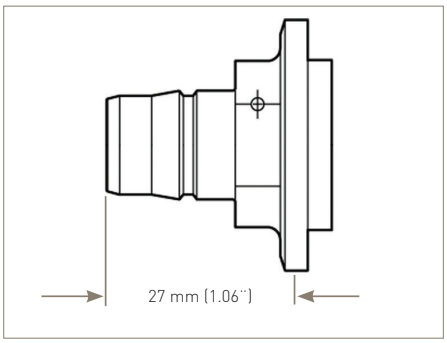

Gromelle (Code R)

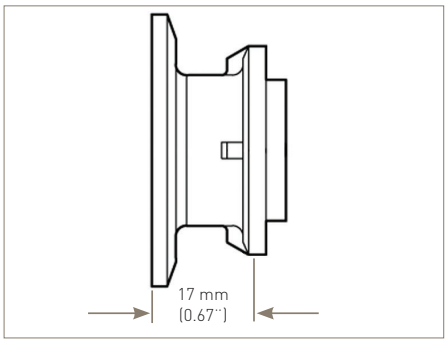

1¨ Tri-clamp (Code T)

MURUS and syringe styles

Large scale disposable inlet / outlet connection styles

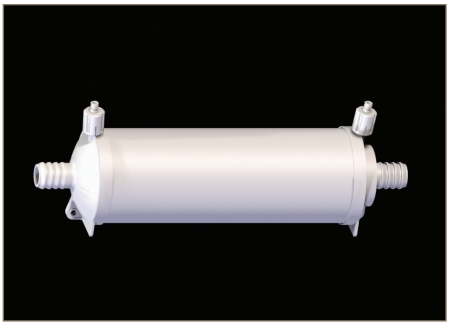

1¨ Hosebarb

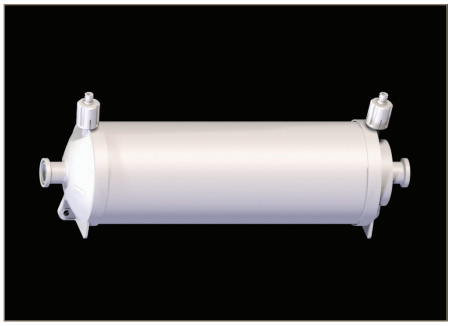

$^{3}/_{4}$¨ Tri-clamp

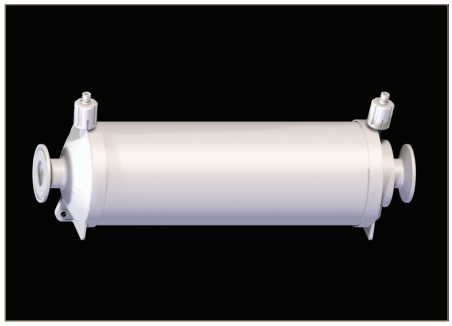

1¨ Tri-clamp

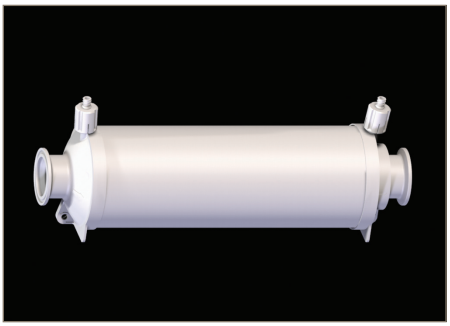

$1^{1}/_{2}$¨ Tri-clamp

T-Port
(1¨ Tri-Clamp only)

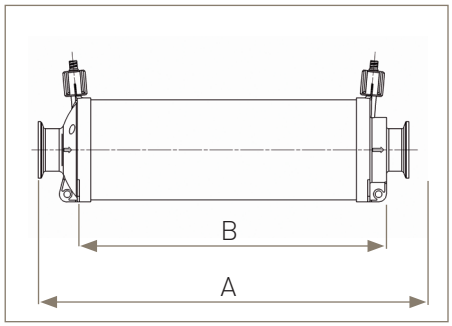

Cartridge Type	'A'	'B'
10¨ 250 mm	13.07¨ 332 mm	10.30¨ 262 mm
20¨ 500 mm	22.79¨ 579 mm	20.04¨ 509 mm
30¨ 750 mm	32.56¨ 827 mm	29.80¨ 757 mm

Syringe filters

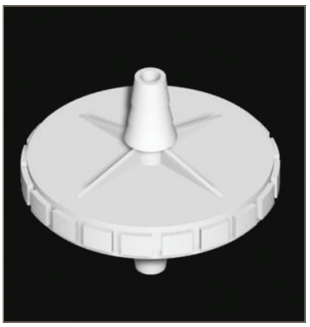

Stepped Hosebarb
Suitable for tubing with 6 mm ($^{1}/_{4}$¨)
12 mm ($^{1}/_{2}$¨) internal diameter

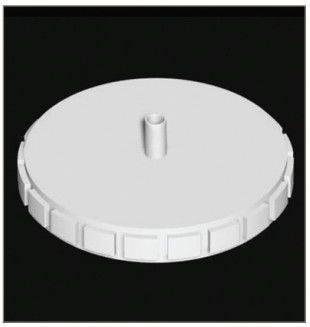

Luer Slip Male

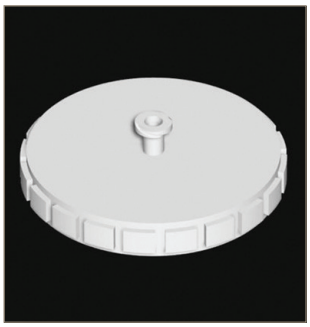

Luer Loc Female

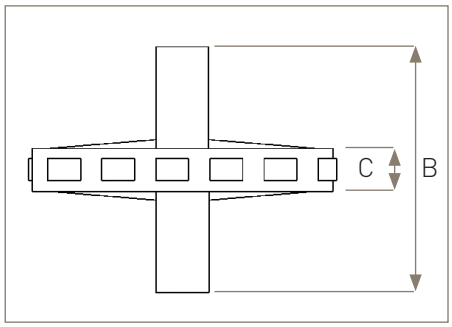

'A'	'B'	'C'
0.98¨ 25 mm	1.12¨ 28.5 mm	0.31¨ 8.0 mm
1.96¨ 50 mm	2.12¨ 54.0 mm	0.31¨ 8.0 mm

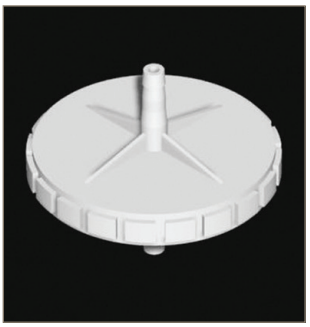

$^{5}/_{16}$¨ Hosebarb

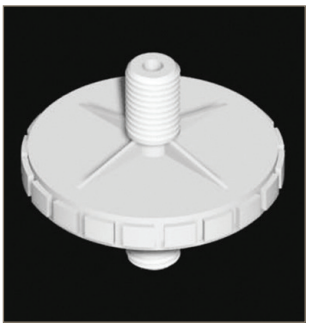

$^{1}/_{8}$¨ BSPM Thread

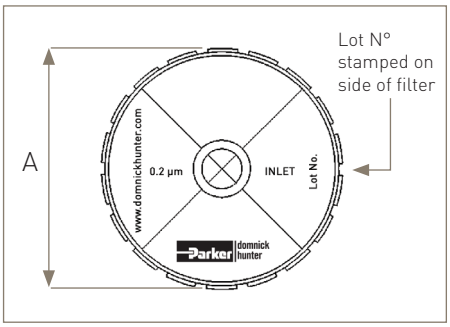

Example of Syringe filter marking

PROPOR TFF styles

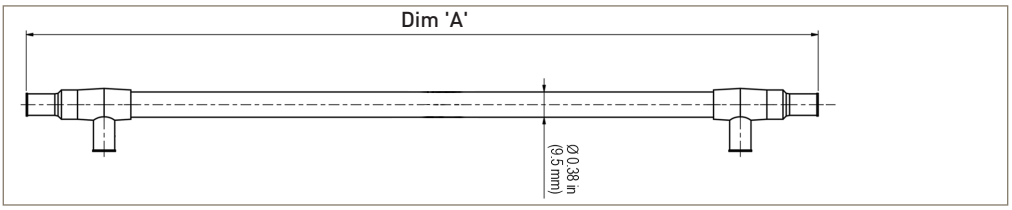

Lab & LabPlus

Cartridge Length 'A'

12" Filter = 12.98" 329.6 mm
24" Filter = 24.38" 619.1 mm
41" Filter = *Not Applicable*

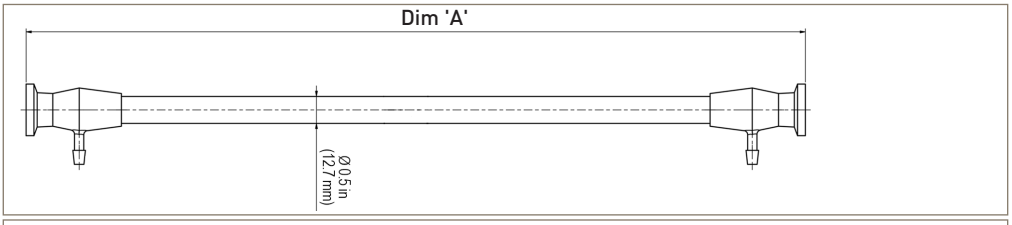

LabMax

Cartridge Length 'A'

12" Filter = 12.00" 305.0 mm
24" Filter = 24.00" 605.0 mm
41" Filter = 41.80" 1062.0 mm

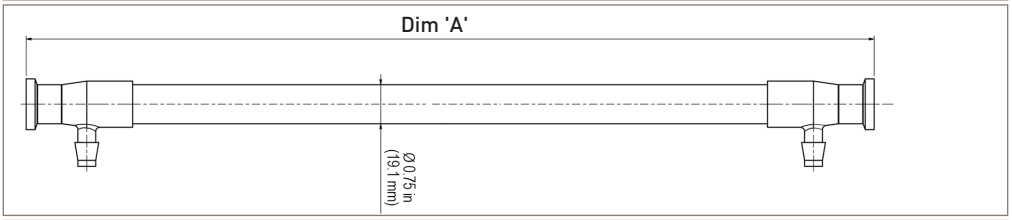

Pilot

Cartridge Length 'A'

12" Filter = 14.25" 361.9 mm
24" Filter = 26.30" 668.1 mm
41" Filter = 41.77" 1061.0 mm

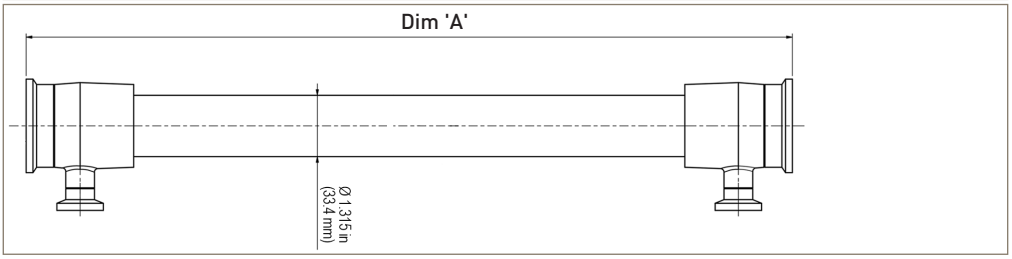

PilotPlus

Cartridge Length 'A'

12" Filter = 12.00" 305.0 mm
24" Filter = 23.50" 597.0 mm
41" Filter = 41.50" 1054.0 mm

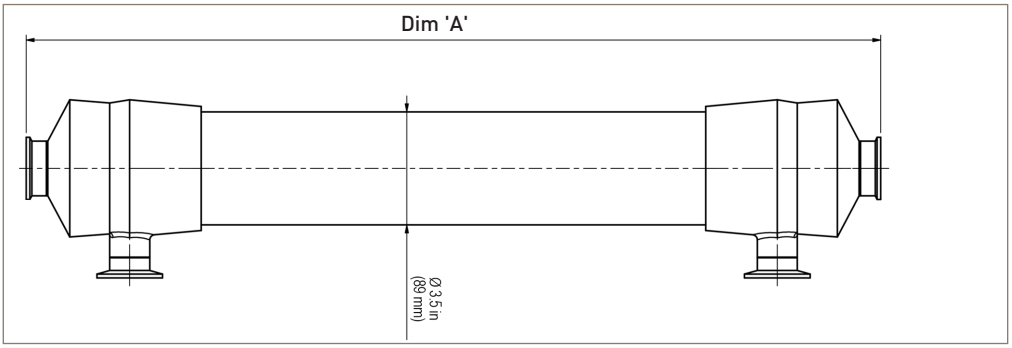

Production
1.5 inch TC Feed / Retentate

Cartridge Length 'A'

12" Filter = 15.00" 381.0 mm
24" Filter = 26.50" 673.0 mm
41" Filter = 44.50" 1130.0 mm

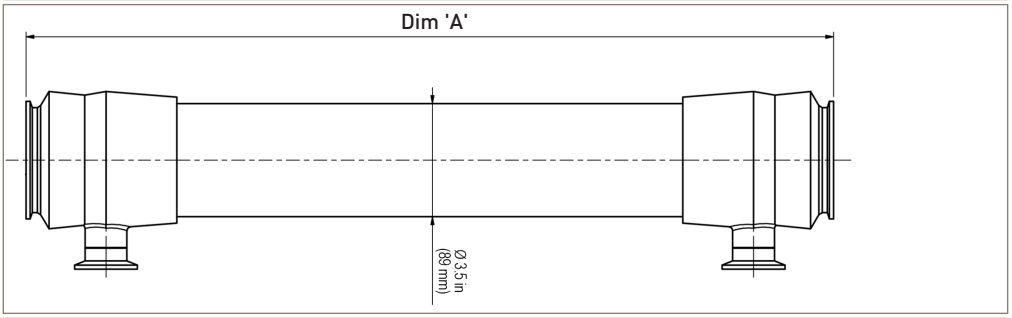

Production
3 inch TC Feed / Retentate

Cartridge Length 'A'

12" Filter = 13.50" 344.0 mm
24" Filter = 25.00" 636.0 mm
41" Filter = 43.00" 1093.0 mm

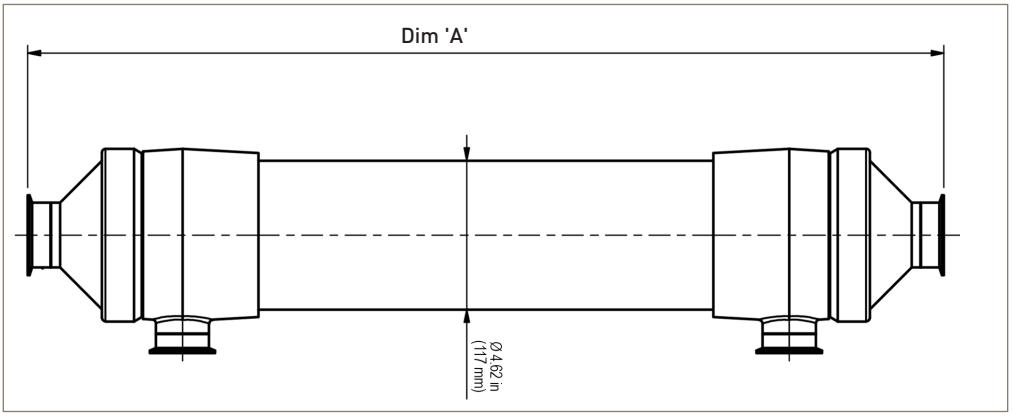

ProductionMax

Cartridge Length 'A'

12" Filter = *Not Applicable*
24" Filter = 28.50" 724.0 mm
41" Filter = 46.50" 1181.0 mm

Installation and operating guidelines

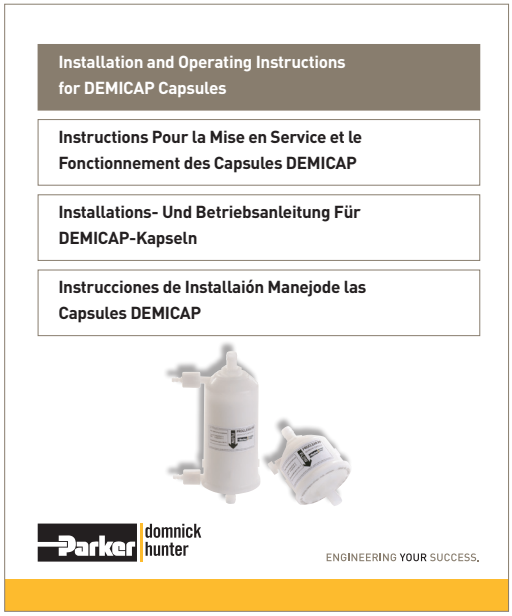

www.parker.com/dhiomid

www.parker.com/dhiomim

www.parker.com/dhiomic

Conversion tables

Volume rate of flow

CONVERT FROM ↓ TO →	Multiplying Factors									
	litre / sec	litre / hr	m^3 / sec	m^3 / hr	ft^3 / min	ft^3 / hr	UK gal / min	UK gal / hr	US gal / min	US gal / hr
litre / sec	1.	3600.	0.001	3.6	2.118882	127.133	13.19814	791.8884	15.85032	951.019
litre / hr	0.000278	1.	0.00000028	0.001	0.000588	0.035315	0.003666	0.219969	0.004403	0.264172
m^3 / sec	1000.	3 600 000.	1.	3600.	2118.88	127 133.	13 198.1	791 889.	15 850.3	951 019.
m^3 / hr	0.27778	1000.	0.000278	1.	0.588578	35.3415	3.66615	219.969	4.402863	264.1718
ft^3 / min	0.471947	1699.017	0.000472	1.699017	1.	60.	6.228833	373.730	7.480517	448.8310
ft^3 / hr	0.007866	28.3168	-	0.028317	0.01667	1.	0.103814	6.228833	0.124675	7.480517
UK gal / min	0.0757	272.766	0.0000758	0.272766	0.160544	9.63262	1.	60.	1.20095	72.05700
UK gal / hr	0.001263	4.54609	-	0.004546	0.002676	0.160544	0.016667	1.	0.020016	1.20095
US gal /min	0.063090	226.8	0.0000631	0.227125	7.4805	448.8	0.832674	49.96045	1.	60.
US gal / hr	0.001052	3.785411	-	0.003785	0.133681	0.133681	0.013878	0.832674	0.016667	1.

Pressure (liquid column, atmospheric, etc.)

CONVERT FROM ↓ TO →	Multiplying Factors									
	lb / in^2	InH_2O	ftH_2O	inHg	atmos.	mmHg	mbar	kgf / cm^2	N / m^2	N / mm^2
lb / in^2	1.	27.6799	2.30667	2.03602	0.068046	51.7149	68.9476	0.070307	6894.76	0.0068948
InH_2O	0.036127	1.	0.083333	0.073556	0.0024583	1.86832	2.49089	0.002540	249.089	0.0002491
ftH_2O	0.433528	12.	1.	0.882671	0.029500	22.4198	29.8907	0.03048	2989.07	0.0029891
inHg	0.491154	13.5951	1.13292	1.	0.033421	25.4	33.8639	0.034532	3386.39	0.003386
atmos.	14.6959	406.781	33.8984	29.9213	1.	760.000	1013.25	1.03323	101 235.	0.101325
mmHg	0.019337	0.535240	0.044603	0.03937	0.0013158	1.	1.33322	0.0013591	133.322	0.0001333
mbar	0.014504	0.401463	0.033455	0.029530	0.0009869	0.750062	1.	0.0010197	100.	0.0001
kgf / cm^2	14.2233	393.700	32.8084	28.959	0.967841	735.559	980.655	1.	98 066.5	0.98066
N / m^2	0.000145	0.004015	0.0003345	0.0002953	0.000099	0.007501	0.01	0.0000102	1.	0.000001
N / mm^2	145.038	4014.63	334.553	295.300	9.86923	7500.62	10 000.	10.1972	1 000 000.	1.

Mass

CONVERT FROM ↓ TO →	Multiplying Factors						
	grain	metric carat	gram	dram	drachm (apoth)	oz	oz tr or oz apoth
grain	1.	0.323995	0.064799	0.36571	0.016667	0.002286	0.002083
metric carat	3.08647	1.	0.2	0.112877	0.51441	0.007055	0.006430
gram	15.4324	5.	1.	0.564383	0.257206	0.035274	0.032151
dram	27.34375	8.85923	1.77185	1.	0.455729	0.0625	0.056966
drachm (apoth)	60.	19.4397	3.88793	2.19429	1.	0.137143	0.125
oz	437.5	141.748	28.3495	16.	7.29167	1.	0.911458
oz tr or oz path	480.	155.517	31.1035	17.5543	8.	1.09714	1.

Conversion tables

Mass

CONVERT FROM ↓ TO →	Multiplying Factors							
	lb	kg	slug	US cwt	UK cwt	oz / US ton	tonne	UK ton
lb	1.	0.453592	0.031081	0.01	0.008929	0.0005	0.000454	0.000446
kg	2.20462	1.	0.068522	0.022046	0.019684	0.001102	0.001	0.000984
slug	32.1740	14.5939	1.	0.32174	0.287268	0.016087	0.014594	0.014363
US cwt	100.	45.3592	3.10810	1.	0.892857	0.05	0.045359	0.044643
UK cwt	112.	50.8023	3.481072	1.12	1.	0.056	0.050802	0.05
oz / US ton	2000.	907.185	62.1620	20.	17.8571	1.	0.907185	0.892857
tonne	2204.62	1000.	68.5218	22.0462	19.6841	1.10231	1.	0.984207
UK ton	2240.	1016.05	69.62143	22.4	20.	1.12	1.01605	1.

Volume and capacity

CONVERT FROM ↓ TO →	Multiplying Factors									
	cm^3	in^3	ft^3	yd^3	m^3	litre	UK pint	UK gallon	US pint	US gallon
cm^3	1.	0.061024	0.0000353	-	0.000001	0.001	0.001760	0.000220	0.002113	0.000264
in^3	16.3871	1.	0.0005787	0.0000214	0.0000164	0.016387	0.028837	0.003605	0.034632	0.004329
ft^3	28 316.8	1728.	1.	0.037037	0.028317	28.3168	49.8307	6.22883	59.8442	7.48052
yd^3	764 555.	46 656	27.	1.	0.764555	764.555	1345.429	168.1784	1615.793	201.9740
m^3	1 000 000.	61 023.7	35.3145	1.30795	1.	1000.	1759.75	219.969	2113.38	264.172
litre	1000.	61.0237	0.035315	0.001308	0.001	1.	1.75975	0.219969	2.11338	0.264172
UK pint	568.261	34.6774	0.020068	0.000743	0.0005683	0.568261	1.	0.125	1.20095	0.150119
UK gallon	4 546.09	277.420	0.160544	0.005946	0.0045461	4.54609	8.	1.	9.60760	1.20095
US pint	473.176	28.875	0.016710	0.000619	0.0004732	0.473176	0.832674	0.104084	1.	0.125
US gallon	3 785.41	231.	0.133681	0.004951	0.0037854	3.785411	6.661392	0.832674	8.	1.

Volume and capacity

CONVERT FROM ↓ TO →	Multiplying Factors								
	UK minim	US minim	cm^3	UK fl drachm	US fl drachm	UK fl ounce	US fl ounce	litre	in^3
UK minim	1.	0.960760	0.059194	0.016667	0.016013	0.002083	0.002002	0.0000592	0.0036122
US minim	1.04084	1.	0.061611	0.17348	0.01667	0.002168	0.002084	0.0000616	0.0037597
cm^3	16.8936	16.2307	1.	0.281561	0.270519	0.035195	0.033814	0.001	0.061024
UK fl drachm	60.	57.64560	3.55163	1.	0.960760	0.125	0.120095	0.003552	0.216734
US fl drachm	62.45040	60.	3.696678	1.04084	1.	0.130105	0.125	0.003697	0.225585
UK fl ounce	480.	461.1648	28.4131	8.	7.68608	1.	0.960760	0.028413	1.73387
US fl ounce	499.604	480.	29.5735	8.32674	8.	1.04084	1.	0.029573	1.80469
litre	16 893.6	16 230.7	1000.	281.561	270.5125	35.1951	33.8140	1.	61.0237
in^3	276.837	265.9739	16.3871	4.61395	4.432899	0.576744	0.554113	0.016387	1.

Chemical compatibility

NC = Not Compatibile
LC = Limited Compatibility
C = Compatible
- = No Data

	Acetic acid 3.5N	Acetic acid 8.75N	Acetic acid conc. 17.5N	Acetone	Acetonitrile	Acidbrite 4 (Diversey) 3.0% v/v	Ammonium Hydroxide 8N	Ammonium Oxalate 0.07N	Amyl Acetate	Aqueous Ammonia 15.5N	Benzyl Alcohol	Benzyalkonium Chloride 0.1%	Boric acid, saturated	Butan-1-ol	Butan-2-ol	Carbon Tetrachloride	Chloroform	Cyclohexane	1,4 - Dioxane	Diverflow (Diversey) 3% v/v
Biopharmaceutical																				
PROCLEAR GF	C	C	C	C	LC	C	C	C	LC	LC	NC	C	C	C	C	NC	NC	NC	LC	NC
PROCLEAR GP	-	C	C	C	LC	C	C	C	LC	LC	NC	C	C	C	C	NC	NC	NC	LC	NC
PROCLEAR PP	C	C	C	C	C	C	C	C	C	C	NC	C	C	C	C	NC	NC	NC	C	C
PROPOR BR	C	-	-	NC	-	-	LC	-	LC	LC	-	-	-	C	C	-	NC	-	-	C
PROPOR HC	C	-	-	NC	-	-	LC	-	LC	LC	-	-	-	C	C	-	NC	-	-	C
PROPOR MR	C	-	-	NC	-	-	LC	-	LC	LC	-	-	-	C	C	-	NC	-	-	C
PROPOR SG	C	-	-	NC	-	-	LC	-	LC	LC	-	-	-	C	C	-	NC	-	-	C
Pharmaceutical																				
HIGH FLOW PREPOR GFA	C	C	C	C	LC	C	C	C	LC	LC	NC	C	C	C	C	NC	NC	NC	LC	NC
PEPLYN AIR	C	C	C	C	C	C	C	C	C	C	NC	C	C	C	C	NC	NC	NC	C	C
HIGH FLOW BIO-X	C	C	C	C	C	-	C	C	C	C	C	C	C	C	C	C	C	C	C	-
HIGH FLOW TETPOR II	C	C	C	C	C	-	C	C	C	C	C	C	C	LC	C	C	C	-	C	-
HIGH FLOW TETPOR H.T.	C	C	C	C	C	-	C	C	C	LC	C	C	C	LC	C	C	C	-	C	-
TETPOR AIR	C	C	C	C	C	-	C	C	C	C	C	C	C	NC	C	NC	NC	LC	C	-
Bag Filters (Polypropylene)	C	C	C	C	C	-	C	C	C	C	-	-	-	C	C	NC	NC	NC	-	-
PEPLYN PLUS	C	C	C	C	C	C	C	C	C	C	NC	C	C	C	C	NC	NC	NC	C	C
PROSTEEL A & N	C	C	C	C	C	C	C	C	C	C	C	C	C	C	C	C	C	C	C	C
SPUNFLOW QE	C	C	C	C	C	-	C	C	C	C	-	-	-	C	C	NC	NC	NC	-	-
TEXFLOW	C	C	C	C	C	-	C	C	C	C	-	-	-	C	C	NC	NC	NC	-	-
PROPOR LR	C	-	-	NC	-	-	LC	-	LC	LC	-	-	-	C	C	-	NC	-	-	C
TETPOR HP	C	C	C	C	C	-	C	C	C	C	C	C	C	NC	C	NC	NC	LC	C	-
TETPOR LIQUID	C	C	C	C	C	-	C	C	C	C	C	C	C	NC	C	NC	NC	LC	C	-
TETPOR PLUS	C	C	C	C	C	-	C	C	C	C	C	C	C	NC	C	NC	NC	LC	C	-
EPDM	C	LC	LC	C	NC	C	C	C	NC	C	C	C	C	C	LC	NC	NC	NC	NC	C
SILICONE	C	LC	NC	NC	NC	C	C	C	NC	C	C	C	C	C	C	C	LC	NC	NC	C
VITON	C	NC	NC	NC	NC	C	C	C	LC	C	C	C	C	C	C	NC	NC	NC	NC	LC

Chemical compatibility

NC = Not Compatibile
LC = Limited Compatibility
C = Compatible
- = No Data

	Diversey 212G 0.6% v/v	Divosan Forte 0.5% v/v	Divosan XT 1% v/v	Ethanol	Ethanol 45%	Ethyl Acetate	Formaldehyde 0.3%	Formaldehyde 37%	Formic acid conc.	Glycerol	Hexane	Hydrochloric acid 1N	Hydrochloric acid conc.	Hydrochloric acid conc. 13%	Hydrogen Peroxide	Hydrogen Peroxide 10% Volume	Hydrogen Peroxide 100% Volume	Methanol	Methyl-Iso-Butylketone	Methylene Chloride @ 40°C (104°F)
Biopharmaceutical																				
PROCLEAR GF	C	C	C	C	C	LC	C	C	NC	C	-	C	NC	-	-	C	C	C	C	LC
PROCLEAR GP	C	C	C	C	C	LC	C	C	NC	C	-	C	NC	-	-	C	C	C	C	LC
PROCLEAR PP	C	C	C	C	C	LC	C	C	C	C	NC	C	C	-	C	C	C	C	C	LC
PROPOR BR	-	C	-	C	C	NC	C	-	-	C	-	C	-	-	-	C	-	C	NC	-
PROPOR HC	-	C	-	C	C	NC	C	-	-	C	-	C	-	-	-	C	-	C	NC	-
PROPOR MR	-	C	-	C	C	NC	C	-	-	C	-	C	-	-	-	C	-	C	NC	-
PROPOR SG	-	C	-	C	C	NC	C	-	-	C	-	C	-	-	-	C	-	C	NC	-
Pharmaceutical																				
HIGH FLOW PREPOR GFA	C	C	C	C	C	LC	C	C	NC	C	-	C	NC	-	-	C	C	C	C	LC
PEPLYN AIR	C	C	C	C	C	LC	C	C	C	C	NC	C	C	-	C	C	C	C	C	LC
HIGH FLOW BIO-X	-	-	-	C	-	LC	C	C	C	C	C	-	-	C	C	-	-	C	C	-
HIGH FLOW TETPOR II	-	-	-	C	-	LC	C	C	C	C	C	-	-	C	-	-	C	C	C	-
HIGH FLOW TETPOR H.T.	-	-	-	-	-	LC	C	C	C	C	C	-	-	C	-	-	C	C	C	-
TETPOR AIR	-	-	-	C	C	LC	C	C	C	C	-	C	C	-	-	C	C	C	C	-
Bag Filters (Polypropylene)	-	-	-	C	C	LC	-	-	C	C	LC	LC	NC	-	-	LC	LC	C	C	NC
PEPLYN PLUS	C	C	C	C	C	LC	C	C	C	C	NC	C	C	-	C	C	C	C	C	LC
PROSTEEL A & N	C	C	C	C	C	C	C	C	C	C	C	LC	-	-	C	C	C	C	C	C
SPUNFLOW QE	-	-	-	C	C	LC			C	C	NC	C	-	C	C	C	C	C	C	LC
TEXFLOW	-	-	-	C	C	LC	-	-	C	C	NC	C	C	-	C	C	C	C	C	LC
PROPOR LR	-	C	-	C	C	NC	C	-	-	C	-	C	-	-	-	C	-	C	NC	-
TETPOR HP	-	-	-	C	C	LC	C	C	C	C	-	C	C	-	-	C	C	C	C	-
TETPOR LIQUID	-	-	-	C	C	LC	C	C	C	C	-	C	C	-	-	C	C	C	C	-
TETPOR PLUS	-	-	-	C	C	LC	C	C	C	C	-	C	C	-	-	C	C	C	C	-
EPDM	C	C	C	C	C	C	C	C	C	C	NC	C	NC	NC	C	C	C	C	NC	-
SILICONE	C	C	C	C	C	NC	C	C	NC	C	NC	C	NC	NC	C	C	C	NC	NC	-
VITON	C	C	C	LC	C	LC	C	C	NC	C	NC	C	NC	NC	C	C	C	C	LC	-

Chemical compatibility

NC = Not Compatibile
LC = Limited Compatibility
C = Compatible
- = No Data

	Nitric acid 2N 14.4%	Nitric acid 15.8N	Ozone	Paraffin Yellow	Pentane	Peracetic acide 0.5% (10 wk test)	Peracetic acid 4%	Perchloroethylene	Petroleum spirits	Phenol (aq) (0.5N)	Phenol 5%	Phenol 0.25%	Polyethylene Glycol 600	Polyglycol 2000-E	Potassium Dichromate 0.1N	Potassium Iodine 0.6N	Potassium Hydroxide 10N	Potassium Permanganate 0.1N	Propan-1-ol	Propan-2-ol
Biopharmaceutical																				
PROCLEAR GF	NC	NC	NC	LC	LC	-	C	NC	NC	-	C	C	NC	-	C	C	NC	NC	NC	NC
PROCLEAR GP	NC	NC	NC	LC	-	-	C	NC	-	-	-	-	NC	-	-	-	C	C	C	C
PROCLEAR PP	C	C	-	C	LC	-	C	-	NC	-	C	C	LC	-	C	C	C	C	C	C
PROPOR BR	C	-	NC	-	-	-	C	NC	-	-	-	-	NC	-	-	-	LC	C	C	C
PROPOR HC	C	-	NC	-	-	-	C	NC	-	-	-	-	NC	-	-	-	LC	C	C	C
PROPOR MR	C	-	NC	-	-	-	C	NC	-	-	-	-	NC	-	-	-	LC	C	C	C
PROPOR SG	C	-	NC	-	-	-	C	NC	-	-	-	-	NC	-	-	-	LC	C	C	C
Pharmaceutical																				
HIGH FLOW PREPOR GFA	C	NC	-	LC	LC	-	C	-	NC	-	C	C	NC	-	C	C	NC	NC	NC	NC
PEPLYN AIR	C	C	-	C	LC	-	C	-	NC	-	C	C	C	-	C	C	C	C	C	C
HIGH FLOW BIO-X	C	C	-	LC	C	-	C	-	-	C	-	-	LC	-	C	C	C	C	C	C
HIGH FLOW TETPOR II	C	C	-	C	-	C	C	-	C	NC	-	-	C	-	C	C	C	C	C	C
HIGH FLOW TETPOR H.T.	C	NC	-	C	-	C	C	-	C	-	-	-	C	-	C	C	C	LC	C	C
TETPOR AIR	C	C	-	C	LC	-	C	-	LC	-	C	C	-	-	C	C	C	C	C	C
Bag Filters (Polypropylene)	NC	C	NC	C	LC	-	-	-	NC	-	C	C	C	-	C	C	C	C	C	C
PEPLYN PLUS	C	C	-	C	LC	-	C	-	NC	-	C	C	C	-	C	C	C	C	C	C
PROSTEEL A & N	C	C	NC	C	C	C	C	C	C	C	C	C	C	C	C	C	C	C	C	C
SPUNFLOW QE	C	C	-	C	LC	-	-	-	NC	-	C	C	C	-	C	C	C	C	C	C
TEXFLOW	C	C	-	C	LC	-	-	-	NC	-	C	C	C	-	C	C	C	C	C	C
PROPOR LR	C	-	NC	-	-	-	C	NC	-	-	-	-	NC	-	-	-	LC	C	C	C
TETPOR HP	C	C	-	C	LC	-	C	-	LC	-	C	C	-	-	C	C	C	C	C	C
TETPOR LIQUID	C	C	-	C	LC	-	C	-	LC	-	C	C	-	-	C	C	C	C	C	C
TETPOR PLUS	C	C	-	C	LC	-	C	-	LC	-	C	C	-	-	C	C	C	C	C	C
EPDM	LC	NC	-	NC	NC	C	C	-	NC	-	C	C	-	C	C	C	C	C	C	C
SILICONE	C	NC	-	C	C	C	C	-	C	-	C	C	-	C	C	C	C	C	C	C
VITON	C	NC	-	NC	NC	C	C	-	NC	-	C	C	-	C	C	C	C	C	LC	LC

Chemical compatibility

NC = Not Compatibile
LC = Limited Compatibility
C = Compatible
- = No Data

	Propan-2-ol, 60:40 H_2O	Pyridine	Sodium Chloride 0.5N	Saline Lactose Broth	Sodium Hydroxide 1N 4%	Sodium Hydroxide 7N 28%	Sodium Hypochlorite (14% Free CL_2)	Sodium thiosulphate	Sulphuric acid 1N	Sulphuric acid conc.	Sulphuric acid	Toluene	1,1,1 Trichloroethane	1,1,2 Trichloroethane	Trichloroecetic Acid 80%	Trichloroacetic Acid 5N	Xylene
Biopharmaceutical																	
PROCLEAR GF	NC	NC	C	C	C	NC	C	C	LC	LC	-	NC	-	NC	LC	-	NC
PROCLEAR GP	C	NC	C	C	C	NC	C	C	C	NC	NC	NC	-	NC	LC	-	NC
PROCLEAR PP	C	C	C	C	C	C	C	C	C	LC	-	NC	-	LC	C	-	NC
PROPOR BR	C	NC	C	C	C	NC	C	-	C	NC	NC	NC	-	NC	-	-	LC
PROPOR HC	C	NC	C	C	C	NC	C	-	C	NC	NC	NC	-	NC	-	-	LC
PROPOR MR	C	NC	C	C	C	NC	C	-	C	NC	NC	NC	-	NC	-	-	LC
PROPOR SG	C	NC	C	C	C	NC	C	-	C	NC	NC	NC	-	NC	-	-	LC
Pharmaceutical																	
HIGH FLOW PREPOR GFA	NC	NC	C	C	C	NC	C	C	LC	LC	-	NC	-	LC	LC	-	NC
PEPLYN AIR	C	C	C	C	C	C	C	C	C	LC	-	NC	-	LC	C	-	NC
HIGH FLOW BIO-X	C	C	C	C	NC	NC	C	C	C	NC	-	NC	-	C	-	C	LC
HIGH FLOW TETPOR II	C	C	C	C	C	C	C	C	C	LC	-	NC	-	C	-	C	LC
HIGH FLOW TETPOR H.T.	C	C	C	C	C	C	C	C	C	NC	-	NC	-	LC	-	C	LC
TETPOR AIR	C	C	C	C	C	C	C	C	-	LC	-	-	-	LC	C	-	NC
Bag Filters (Polypropylene)	-	C	C	-	-	C	-	C	C	LC	-	NC	-	LC	C	-	NC
PEPLYN PLUS	C	C	C	C	C	C	C	C	C	LC	-	NC	-	LC	C	-	NC
PROSTEEL A & N	C	C	C	C	C	C	C	C	C	C	C	C	C	C	C	C	C
SPUNFLOW QE	-	C	C	-	-	C	-	C	C	LC	-	NC	-	LC	C	-	NC
TEXFLOW	-	C	C	-	-	C	-	C	C	LC	-	NC	-	LC	C	-	NC
PROPOR LR	C	NC	C	C	C	NC	C	-	C	NC	NC	NC	-	NC	-	-	LC
TETPOR HP	C	C	C	C	C	C	C	C	-	LC	-	-	-	LC	C	-	NC
TETPOR LIQUID	C	C	C	C	C	C	C	C	-	LC	-	-	-	LC	C	-	NC
TETPOR PLUS	C	C	C	C	C	C	C	C	-	LC	-	-	-	LC	C	-	NC
EPDM	C	C	C	C	C	C	C	C	C	-	-	NC	-	NC	NC	-	C
SILICONE	C	NC	C	C	C	C	C	C	C	-	-	LC	-	LC	LC	-	LC
VITON	C	C	C	C	C	LC	C	C	C	-	-	NC	-	LC	NC	-	NC

The chemicals are arranged in alphabetical order using their most common or trade names. If the chemical in question does not appear to be listed, it may be found elsewhere in the table under a pseudonym, in particular its IUPAC[11] name.

With regard to compatibility:

- Any product that has Limited Compatibility (LC) at ambient temperatures should not be used at a higher temperature.
- The list of compatibilities does not take into account any synergistic effects of more than one chemical present in the solution to be filtered.
- Test Conditions - 72 hours at ambient temperature and pressure, unless otherwise stated.
- Contact Parker domnick hunter for confirmation of compatibility with specific operating conditions.

Glossary of terms used in filtration

A

Absolute pressure
Associated with gas systems. The absolute pressure is the total pressure exerted on a system equal to atmospheric pressure plus gauge pressure, for example 2 barg = 3 bar absolute.

Absolute rating
A definitive value given to a filter that represents the smallest particle size capable of being captured by the filter. Typically it refers to 100% retention at a particular micron rating. The assigning of micron ratings is however dependant on the test methodology used. e.g.: a sterile grade absolute rated liquid filter is assigned a 0.2 micron rating if it retains all microorganisms of a predetermined size it does not mean that the filter has 0.2 micron pores. When selecting a filter for a particular application always refer to the methods and assumptions made for assigning the micron rating.

Air flow
A measure of the amount of air that flows through a filter at a certain system pressure and pressure drop. This is typically expressed in normalized units i.e.: the relative flow rate at atmospheric pressure and is quoted for a clean unused filter. Always quote system pressures when sizing gas filters.

Aerosol integrity testing
A method specifically designed for sterile gas filters whereby aerosol in the most penetrating particle size (MPPS: 0.2–0.3 micron) is used as a non-destructive challenge to the filter to determine whether it is providing sterile gas. The test can be performed using an automated test instrument such as the Parker domnick hunter VALAIRDATA II.

Autoclave
A closed pressure vessel into which steam is introduced (typically at a temperature of 121 - 134 °C (250 - 273 °F)) to sterilise the contents.

B

Backwash
A reverse flow of liquid through a filter in order to flush out trapped solids.

Bacterial challenge
This refers to a live bacterial challenge of a filter in either the liquid or gas phase. The type of organism used for the test depends on the assigned micron rating of the filter. For example a 0.2 micron sterile grade liquid filter is challenged with the organism *Brevundimonas diminuta* (test method ASTM 838-05) while a 0.45 micron absolute rated liquid filter is challenged with a suspension of *Serratia marcesens*. In some cases for critical performance validation requirements it will be necessary to challenge the filter with bacteria in the actual process fluid being filtered.

Beta rating
A measure of a filter's efficiency based on the number of particles present in the influent (upstream) to those in the effluent (downstream). Efficiency is expressed as a BETA ratio and is calculated as follows:

$$\text{Beta Ratio} = \frac{\text{Number of particles in the influent}}{\text{Number of particles in the effluent}}$$

Generally a Beta Ratio at 5000 is accepted by the industry as being an 'absolute' rating for media prefilters.

C

Cartridge or filter cartridge
A filtration or separation device usually supplied in a cylindrical format which locates easily and quickly into a filter housing.

Chemical compatibility
When selecting filter materials attention needs to be given to their compatibility to the fluid which is to be filtered. A filter (depending on application) needs to be assessed for reduction in performance in terms of material degradation, integrity, etc. as well as quantifying any extractables levels. It should be noted that the compatibility of a filter is dependent on the process conditions. General material compatibility databases assume limited temperature and exposure time. They also refer to just one chemical. In an actual process there could be a combination of chemicals, high differential pressure and high temperature which all could influence filter performance. General guidance on filter performance can be given from experience and in-house data but normally it is recommended that filter compatibility is tested in the process conditions.

Clarification
This is the selective removal of particulate from a process fluid usually achieved through depth filtration. The degree of clarification is dependant on customer specification.

Colony forming unit (CFU)
The minimum number of cells on an agar plate which will give rise to a visible colony. This term is most commonly seen in the validation of sterile filters to a live bacterial challenge where the challenge and the number of organisms recovered is stated in CFU.

Coalescing
When small droplets of aerosolized liquid merge together to form larger droplets. This normally occurs in a depth filter as the process gas carrying the entrained liquid droplets passes through the filtration media. A coalescing filter such as the Parker domnick hunter OIL-X also flows from the inside of the cartridge to the outside so any coalesced liquid drains to the base of the filter and subsequently into the bottom of the filter housing.

Colloid
Colloids are molecules that have not coagulated together to form a precipitate but remain in liquid suspension. These molecules are very small in size and have a molecular charge that affects their affinity for other molecules and materials. The choice of filter type and design is of paramount importance for a colloidal system if premature blockage is to be avoided.

Compaction
This can occur to a filtration medium when it is subjected to high differential pressures. The high forces on the filtration media (especially depth type) can lead to compression of the structure and subsequent changes in filtration characteristics.

Concentrate
The retained non filtered stream from a crossflow filter system.

Cross flow filtration
A filter characterized by the feed stream travelling parallel to instead of directly through the filtration medium. This has the advantage of minimizing the blockage of the membrane as the system is to some extent 'self cleaning'.

D

Dead leg
An area of pipework where there is potentially no flow and therefore stagnant conditions exists. It is extremely important to eliminate these if contamination issues are to be minimized.

Depth filter
A depth filter is characterised by the thickness of the filtration media as well as its structure. A depth filter is normally fibrous in nature and contaminant is retained through the depth of the filtration media rather than just the surface.

Diffusional interception

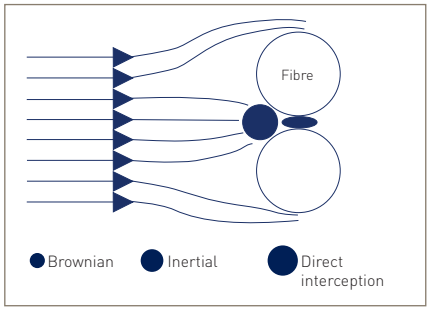

This is the dominant removal mechanism for the smallest particles captured by a filter in the gas phase. Particles as small as 0.01 µm exhibit great diffusional movement (Brownian Motion) which has the effect of increasing its nominal mean diameter to the filter. The efficiency of this capture mechanism decreases as the particle size increases.

Diffusional flow
A non-destructive integrity test method for membrane based filters. It involves wetting out every pore in the membrane structure with water or the process fluid or a low surface tension liquid in case of hydrophobic membrane. Compressed air is applied to the upstream side of the filter and gas diffuses through the wetted pores. This flow rate is either measured directly by mass flow meters or indirectly via measuring the drop in pressure on the upstream side of the filter.

Differential pressure
Differential pressure (dP) is the difference in the pressure measured upstream (influent) and downstream (effluent) of a filter. Particularly in liquid applications differential pressure will increase to a point where either filter damage or insufficient flow will result. The higher the differential pressure the higher the energy cost so it is important to balance the pressure drop requirements with the installation size and required lifetime to blockage. Units of measurement are bar and psi as opposed to barg and psig.

Glossary of terms used in filtration

E

Effective filtration area (EFA)
This is the area of filtration material available for filtration.

Effluent
The fluid which has passed through a filter.

Extractables
When a filter is in contact with the process fluid, chemical components may leach from the materials of construction and deposited in the filtrate. The levels of non-volatile extractables for a limited number of fluids are quoted in the filter validation guide. The level of extractables is dependent on the process conditions. Filtration of solvents, high temperature fluids and steam sterilization are three areas where extractables can increase.

F

Filter (noun) / filter cartridge / cartridge
An apparatus which performs filtration.

Filter (verb)
To pass a fluid or gas through a porous medium in order to remove solid particles.

Filter efficiency
Filter efficiency is a measure of the percentage of particles that are removed from the fluid by the filter. Typically these are given in terms of the % removal for a certain size of particle. A filter efficiency may also be given across a range of particle sizes . For a number of gas applications the efficiency of a filter may be quoted in relation to the filters ability to remove particles at the most penetrating particle size (MPPS) of 0.2-0.3 micron. Always ensure filter efficiency is matched to the requirements of the process.

Filterability indices (FI) and Vmax
This is an indication of a filters capacity to process certain fluids. It generally gives a measure of the rate of blockage of a filter as well as the theoretical maximum throughput. The time required to flow two consecutive 200 ml fluid samples is recorded and the filterability indices are calculated from the results. The two formulae used are as follows:

$$(Vmax) = \frac{400 + 400T_1}{(T_2 - 2T_1)}$$

$$FI = (T_2 - 2T_1)$$

T_1 = Time to filter first 200 ml
T_2 = Time to filter second 200 ml

It should be noted that these methods give a general indication of performance and are often more useful in comparative performance measurement between different filter types.

Filtrate
Another name for effluent.

Filter sterilization
Sterilization is the act of making an organism barren or infertile (unable to reproduce). The sterilization of a filter can be achieved by a number of methods including dry heat, steam, ethylene oxide, hydrogen peroxide or irradiation. The method chosen depends on the process and the materials of construction of the filter but by far the most widely used is that of steam, either in an autoclave or via steam-in-place (SIP).

Flux
The rate of fluid flow (gas or liquid) when expressed in terms of flow per unit area of the filter that removes the contaminants from the fluid stream. It can apply to both depth and membrane media.

G

Gauge pressure
The pressure of a system measured by a gauge, which excludes atmospheric pressure, for example 1 bar atmosphere (or 1 bar absolute) = 0 barg.

H

Housing
An enclosure for a filter element, typically rated for pressure, that directs the fluid through the filter.

Hydrophilic
Hydrophilicity is the ability of a filtration media to 'wet out', that is, for the porous structure to be completed filled with the liquid being filtered. This is an important characteristic as incomplete wetting of the structure can lead to a reduction in flow capacity and problems with integrity testing. All liquid filters are 'hydrophilic' apart from those that may have been selected for use with aggressive solvents. These filters are typically based on a fluoropolymer and their structure needs to be wetted with a low surface tension liquid such as isopropyl alcohol. Once the structure has been wet, the filter will process aqueous solutions without a problem.

I

Inertial impaction
This is a removal mechanism for particles captured by a filter in the gas phase. The particles follow the streamlines of gas between the filter fibres and membrane pores. Due to their mass the inertia of the particle will cause it to move out of the streamline and attach itself to a fibre or pore wall. The effect of this capture mechanism increases with particle size / mass.

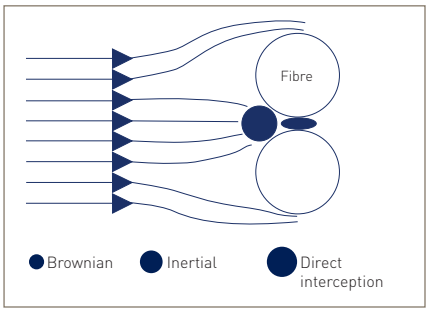

Influent
The fluid entering the filter system.

In vitro
In an unnatural position e.g. outside the body " In vitro" is Latin for "in glass" an experiment performed without the involvement of a whole, living organism.

In vivo
The testing of a substance or experimentation in or using a living, whole organism.

L

Log reduction value (LRV)
This is a measurement of a filters removal efficiency for a specific contaminant. It is normally associated with the bacterial retention of a filter. The LRV is :

$$\text{Log}_{10} \frac{\text{Number of bacteria in the influent}}{\text{Number of bacteria in the effluent}}$$

e.g. $\left(\text{Log}_{10} \frac{1 \times 10^{10}}{1}\right)$ = LRV of >10

It is always expressed as > (greater than) as 1 has to be used for the effluent even if there are no organisms present. This can also be expressed as a 10 log reduction or a titre reduction of 10^{10}.

M

Medium (Media)
This is the component of the filter that removes the contaminants from the fluid stream. Also commonly referring to depth - type materials, in its more generic sense a filter medium / media can refer to either depth or membrane filter materials.

Microfiltration
Microfiltration is the process of removing particles from a liquid or gas by passing it through a porous medium. It generally involves removing particles between the sizes of 10 and 0.04 micron in liquids, and down to 0.01 micron in gases.

Micron (micrometer)
Designated by the Greek letter μ a micron is 10^{-3}mm (millimeters) or 10^{4} (Angstroms) or 0.00003937 inch. For a perspective on this size a human hair is approximately 70 microns thick and the limit of resolution of the naked eye is around 40 microns.

Membrane
A membrane is a thin, porous film typically between 30 and 150 micron in thickness. It has of tens of millions of pores / cm^2 through which the process fluid runs. The nature of the pore structure is determined by the manufacturing method. Solvent cast membranes such as Polyethersulphone (PES) and Mixed Esters of Cellulose (MEC) have a defined pore structure which can be asymmetric whilst membrane such as Polytetrafluoroethylene (PTFE) which is manufactured by 'stretching' have a fibrous appearance and a less defined pore structure.

N

Nanofiltration
Filtration that removes both particles and small dissolved molecules and ions. Finer than ultrafiltration, not as fine as Reverse Osmosis.

Nanometer
A nanometer is 10^{-9} meters

Nominal filter rating
This rating is often quoted within the filtration industry but great care should be taken in ensuring the efficiency and test methodologies are completely understood. A 5 micron nominal filter could be 99% retentive at 5 micron, another could be 80%. It can be very misleading to compare the performance of filters on nominal ratings. When selecting a filter the duty required should be

Glossary of terms used in filtration

compared to the individual performance characteristics of filter. Parker domnick hunter has the experience to help select the most appropriate filter for the application.

O

Oleophobic
Oleophobic membranes and depth media have the capability to repel fluids such as oil and lubricants. This phenomena is used in some of the new generation oil coalescing filters.

Oxidation
This refers to the degradation of materials in the presence of oxygen and high temperature. It is normally associated with high temperature gas systems where the combination of steam sterilization can lead to the onset of oxidation of polypropylene filtration components in as little as 3 months. For applications where continuous (1 year and above) exposure to high temperature is required the use of a special product with oxidation resistant filtration support materials such as the HIGH FLOW TETPOR H.T. is recommended.

Oxidation can also occur on filters used in ozonated water systems. In these instances careful selection of filter components is required.

P

Pleating
Filtration media can be pleated or corregated to maximize the filtration area. By pleating filtration media it is possible to fit a large EFA in a relatively small cartridge volume.

Voids volume (porosity)
This is a measurement of the free space in a filtration media. The more free space the less the resistance to flow. Typical values for a membrane are in the region of 50 – 80% and for depth type media between 60 - 95%.

Pressure decay
A non-destructive integrity test method for membrane based filters. It involves wetting out every pore in the membrane structure with water or the process fluid or a low surface tension liquid in case of hydrophobic membrane. Compressed air is applied to the upstream side of the filter and gas diffuses through the wetted pores. This causes a pressure drop in the upstream side of the filter known as the pressure decay. The maximum allowable pressure decay for a filter is dependant on the upstream volume and therefore must be known.

Pressure Decay (mbar /min) =

$$\frac{\text{Diffusional Flow (ml / min)}}{\text{Upstream Vol (l)}}$$

Pyrogenicity
Pyrogenicity is the tendency of a substance to raise body temperature when injected into the body. Filtration materials that come in contact with injectable liquids must meet pyrogenicity standards and be classified as non-pyrogenic. Pyrogenicity can be determined by such standard tests as the Limulus Amoebocyte Lysate (LAL) test.

Permeate
Synonymous with filtrate.

R

Regeneration
When a filter becomes blocked with protein based material it may be possible to regenerate, or clean the filter, so improving overall lifetime.

Reverse jetting
The application of high pressure compressed gas to the inside of a filter to release powder collected on its surface.

Reverse osmosis
Forcing a liquid through a non-porous membrane, removing particles, along with dissolved molecules and ions. Reverse osmosis is the finest form of membrane separation and is used to desalinate water for drinking, and in the preparation of ultrapure water for various industries.

S

Sanitization
Reduction not elimination of a microbial population to render a fluid/system free from spoilage organisms and increase shelf-life of products.

Sedimentation
The process by which suspended solid particles in a liquid phase gravitate downwards. Eventually they will settle on the bottom of the holding tank, pipework etc. The rate of sedimentation is governed by particle mass and fluid velocity.

Separation
Separation is the process of dividing a fluid stream (either liquid or gas) into separate components. This can include separation of two phases (liquid from gas), separation of soluble impurities (known as purification) or solids from a fluid (filtration). The products of a separation can themselves be separated further in many cases.

Silt density index (SDI)
This is another measure of the rate of blockage and is typically used when the system is relatively clean and the difference between T_{400} and T_{200} (see Filterability Indices) is so small that large inaccuracies can occur. The SDI uses the time taken for two 500 ml samples of fluid to pass though a 47 mm diameter 0.45 µm disc. There is typically a 15 minute gap between the two samples being taken.

Size exclusion
This is a removal mechanism for particles captured by a filter in either the liquid or gas phase. It applies to particles that are physically too large to pass through the filter structure. The mechanism is not affected by flow rate unless pressure drops cause deformation of the particle.

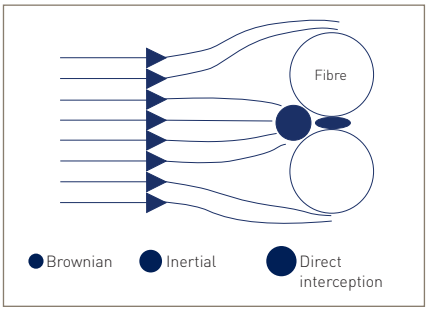

Solute
A solid which is dissolved in a solvent. For instance, the salt in salt water is a solute.

Solvent
A liquid substance capable of dissolving other substances. The solvent does not change its state in forming a solution.

Stabilization
This is the reduction in microbial loading in a fluid system and is generally associated with the beverage industry where partial rather than complete removal of spoilage organisms may be required to extend shelf-life.

Sterilization
In terms of filtration this means the elimination of all living microorganisms from the influent stream.

Surfactant
Acronym for a surface active agent. In filtration it is also sometimes called a wetting agent. If a filter is being used to filter aqueous solutions and incomplete wetting of the membrane pore structure is encountered a 'wetting agent' may be added to the membrane surface by flowing a quantity of surfactant through the filter. However, the use of a wetting agent is not desirable, especially in a pharmaceutical environment, as there is also the possibility of the surfactant leaching from the filter into the filtrate during processing or steam sterilization, etc.

T

Thermal stability
This is most important during sterilization of the filter. The majority of cartridge and disposable type filters are manufactured from polymers such as polypropylene and nylon. During sterilization the components of the filter expand and contract putting great strain on the device. The filter performance with respect to steam sterilization should be matched closely to the requirements of the process. It should be noted that some filter configurations cannot be in-situ steam sterilized but can only be autoclaved.

Titre reduction
See LRV.

Turbidity
This is a measurement of the amount of suspended particles in a fluid and is effectively a clarity index. It is measured in NTU (Nephelometric Turbidity Units).

Glossary of terms used in filtration

U

Unloading
The release of contaminants which had initially been captured by a filter. This is most likely to occur in filtration systems with are subjected to high pressure pulses such as high capacity filling lines.

Ultrafiltration
Filtration of a liquid that separates suspended or dissolved substances based on their molecular weight or size. Ultrafiltration generally refers to separating everything larger than a large molecule. Compare to microfiltration, nanofiltration, reverse osmosis.

V

Viscosity
Viscosity is a measurement of the resistance to flow of a fluid. The more viscous the fluid, the greater the time required to filter. Viscosity will in general reduce with an increase in temperature. This is why very viscous solutions such as glucose are heated prior to filtration.

Vmax
See Filterability Indices.

W

Water flow
Measure of the amount of water that flows through a filter. Related to the degree of contamination, differential pressure, total porosity, and filter area (ASTM:F317-72). Expressed in the membrane industry in units of millilitres / minute / square centimetre.

Water Intrusion
A non-destructive integrity test method specifically designed for hydrophobic filters. It involves filling the upstream volume of a filter housing with water and applying a pressure, typically in the order 2.5 barg. As the membrane is hydrophobic the bulk water will not pass through. However, due to the difference in pressure between the upstream and downstream side of the filter there is a net loss of water from the upstream side due to evaporation and the slight penetration of water into the pore structure. This loss of water results in a pressure drop which is displayed as either a water intrusion value or a water flow value. The water intrusion is the measure of the increase in compressible gas volume expressed at atmospheric pressure and the water flow equates to the volume of water lost from the system.

Water flow = Water Intrusion / Absolute test pressure.

Parker Worldwide

Europe, Middle East, Africa

AE – United Arab Emirates, Dubai
Tel: +971 4 8127100
parker.me@parker.com

AT – Austria, Wiener Neustadt
Tel: +43 (0)2622 23501-0
parker.austria@parker.com

AT – Eastern Europe, Wiener Neustadt
Tel: +43 (0)2622 23501 900
parker.easteurope@parker.com

AZ – Azerbaijan, Baku
Tel: +994 50 2233 458
parker.azerbaijan@parker.com

BE/LU – Belgium, Nivelles
Tel: +32 (0)67 280 900
parker.belgium@parker.com

BG – Bulgaria, Sofia
Tel: +359 2 980 1344
parker.bulgaria@parker.com

BY – Belarus, Minsk
Tel: +375 17 209 9399
parker.belarus@parker.com

CH – Switzerland, Etoy
Tel: +41 (0)21 821 87 00
parker.switzerland@parker.com

CZ – Czech Republic, Klecany
Tel: +420 284 083 111
parker.czechrepublic@parker.com

DE – Germany, Kaarst
Tel: +49 (0)2131 4016 0
parker.germany@parker.com

DK – Denmark, Ballerup
Tel: +45 43 56 04 00
parker.denmark@parker.com

ES – Spain, Madrid
Tel: +34 902 330 001
parker.spain@parker.com

FI – Finland, Vantaa
Tel: +358 (0)20 753 2500
parker.finland@parker.com

FR – France, Contamine s/Arve
Tel: +33 (0)4 50 25 80 25
parker.france@parker.com

GR – Greece, Athens
Tel: +30 210 933 6450
parker.greece@parker.com

HU – Hungary, Budaörs
Tel: +36 23 885 470
parker.hungary@parker.com

IE – Ireland, Dublin
Tel: +353 (0)1 466 6370
parker.ireland@parker.com

IT – Italy, Corsico (MI)
Tel: +39 02 45 19 21
parker.italy@parker.com

KZ – Kazakhstan, Almaty
Tel: +7 7273 561 000
parker.easteurope@parker.com

NL – The Netherlands, Oldenzaal
Tel: +31 (0)541 585 000
parker.nl@parker.com

NO – Norway, Asker
Tel: +47 66 75 34 00
parker.norway@parker.com

PL – Poland, Warsaw
Tel: +48 (0)22 573 24 00
parker.poland@parker.com

PT – Portugal, Leca da Palmeira
Tel: +351 22 999 7360
parker.portugal@parker.com

RO – Romania, Bucharest
Tel: +40 21 252 1382
parker.romania@parker.com

RU – Russia, Moscow
Tel: +7 495 645-2156
parker.russia@parker.com

SE – Sweden, Spånga
Tel: +46 (0)8 59 79 50 00
parker.sweden@parker.com

SK – Slovakia, Banská Bystrica
Tel: +421 484 162 252
parker.slovakia@parker.com

SL – Slovenia, Novo Mesto
Tel: +386 7 337 6650
parker.slovenia@parker.com

TR – Turkey, Istanbul
Tel: +90 216 4997081
parker.turkey@parker.com

UA – Ukraine, Kiev
Tel +380 44 494 2731
parker.ukraine@parker.com

UK – United Kingdom, Warwick
Tel: +44 (0)1926 317 878
parker.uk@parker.com

ZA – South Africa, Kempton Park
Tel: +27 (0)11 961 0700
parker.southafrica@parker.com

North America

CA – Canada, Milton, Ontario
Tel: +1 905 693 3000

US – USA, Cleveland
Tel: +1 216 896 3000

Asia Pacific

AU – Australia, Castle Hill
Tel: +61 (0)2-9634 7777

CN – China, Shanghai
Tel: +86 21 2899 5000

HK – Hong Kong
Tel: +852 2428 8008

IN – India, Mumbai
Tel: +91 22 6513 7081-85

JP – Japan, Tokyo
Tel: +81 (0)3 6408 3901

KR – South Korea, Seoul
Tel: +82 2 559 0400

MY – Malaysia, Shah Alam
Tel: +60 3 7849 0800

NZ – New Zealand, Mt Wellington
Tel: +64 9 574 1744

SG – Singapore
Tel: +65 6887 6300

TH – Thailand, Bangkok
Tel: +662 186 7000-99

TW – Taiwan, Taipei
Tel: +886 2 2298 8987

South America

AR – Argentina, Buenos Aires
Tel: +54 3327 44 4129

BR – Brazil, Sao Jose dos Campos
Tel: +55 800 727 5374

CL – Chile, Santiago
Tel: +56 2 623 1216

MX – Mexico, Apodaca
Tel: +52 81 8156 6000

European Product Information Centre
Free phone: 00 800 27 27 5374
(from AT, BE, CH, CZ, DE, DK, EE, ES, FI, FR, IE, IL, IS, IT, LU, MT, NL, NO, PL, PT, RU, SE, SK, UK, ZA)

© 2015 Parker Hannifin Corporation. All rights reserved.

CAT_LifeSciences_01/16 Rev. 1F

Parker Hannifin Manufacturing Ltd
domnick hunter
Process Filtration - Europe
Durham Road
Birtley, Co. Durham
DH3 2SF, England
phone +44 (0)191 4105121
fax +44 (0)191 4105312
email: dhprocess@parker.com
www.parker.com/dhpharma

Parker Hannifin Corporation
domnick hunter
Process Filtration - North America
2340 Eastman Avenue,
Oxnard, California, USA 93030
toll free: 877 784 2234
phone: +1 805 604 3400
fax: +1 805 604 3401
email: dhpsales.na@parker.com
www.parker.com/dhpharma

ENERGOEKONOM spol. s r.o., Wolkerova 433, CZ-250 82 Úvaly, Czech Republic, Tel.: +420 281 981 055, info@energoekonom.cz, www.energoekonom.cz